EXCLUSIVE Triple Bonus

See Back Cover for Details

The Best of Woodsmith® SHOP

12 Complete Project Plans
from your favorite woodworking show

How-To Techniques
for getting top-notch results

Practical, Hands-On Tips
straight from the shop

The Best of Woodsmith Shop

Creative Home Group

Editor: Vincent Ancona
Multimedia Editor: Phil Huber
Associate Editor: Robert Kemp
Assistant Editor: Erich Lage

Executive Art Director: Todd Lambirth
Senior Graphic Designer: Bob Zimmerman
Senior Illustrators: Dirk Ver Steeg,
Harlan V. Clark, Peter J. Larson
Graphic Designer: Becky Kralicek

Creative Director: Chris Fitch
Project Designers: Dennis Volz, Dillon Baker
Project Designer/Builder: John Doyle
CAD Specialist: Steve Johnson
Shop Craftsman: Dana Myers

Senior Photographer: Crayola England
Associate Style Director: Rebecca Cunningham
Senior Electronic Image Specialist: Allan Ruhnke
Production Assistant: Minniette Johnson

Founding Editor: Donald B. Peschke

The Best of Woodsmith Shop is published by
Cruz Bay Publishing, Inc.
2200 Grand Ave., Des Moines, IA 50312
Canada Post Agreement 40038201.
Canada BN 82564 2911.
©Copyright 2017 Cruz Bay Publishing, Inc.
All rights reserved. No part of this book may be reproduced in any form or by any electronic or mechanical means, including information storage and retrieval devices or systems, without prior written permission from the publisher, except that brief passages may be quoted for reviews.

Woodsmith® is a registered trademark of
Cruz Bay Publishing, Inc.

For subscription information about
Woodsmith, visit us online at:
Woodsmith.com or call (800) 333-5075

A Supplement to Cruz Bay Publishing, Inc.

Printed in U.S.A.

ACTIVE INTEREST MEDIA

PRESIDENT & CEO **Andrew W. Clurman**
SENIOR VICE PRESIDENT, TREASURER & CFO **Michael Henry**
CHIEF INNOVATION OFFICER **Jonathan Dorn**
EXECUTIVE VICE PRESIDENT, OPERATIONS **Patricia B. Fox**

heirloom Furniture

Craftsman Library Desk 6
This classic project offers Craftsman design at its best. It's practical, simple in detail, and features solid, straightforward construction.

Campaign Chest 16
How about a project that combines classic details and practical storage? It's guaranteed to take your skills to the next level.

Heirloom Tables 24
Starting with one master technique, you can build three classic tables that look great in almost any room in the house.

SHOP SAFETY IS YOUR RESPONSIBILITY

Using hand or power tools improperly can result in serious injury or death. Do not operate any tool until you read the manual and understand how to operate the tool safely. Always use all appropriate safety equipment as well as the guards that come with your tools and equipment and read the manuals that accompany them. In some of the illustrations in this book, the guards and safety equipment have been removed only to provide a better view of the operation. Do not attempt any procedure without using all appropriate safety equipment or without ensuring that all guards are in place. Cruz Bay Publishing, Inc. assumes no responsibility for any injury, damage, or loss suffered as a result of your use of the material, plans, or illustrations contained in this book.

designer Projects

Three Bookcases 36
Three bookcases, one basic design. You can choose from traditional oak, country pine, or contemporary maple details.

TV Cabinet 42
This design is as up-to-date as the gear you'll fill it with. Clean lines and simple joinery make it a great builder's project.

Contoured Keepsake Box 52
Building this attractive lidded box will give you a chance to try some new techniques. The small size keeps it all manageable.

home Storage

Lighted Display Cabinet 60
Building a display cabinet doesn't have to be a lot of work. Create the perfect place to show off your treasures in no time.

Mudroom Storage Bench 66
With its modern but lasting design, seating, and deep storage bays, this bench is the perfect place to take off your shoes.

Drop-Front Storage Center 74
Versatile storage and "country" charm all in one easy-to-build package. You'll be more organized as a bonus!

weekend Projects

Keepsake Box 82
The unique look of this box is guaranteed to draw attention. And building one is sure to raise your skill level a notch or two.

Six-Candle Centerpiece 88
A few small pieces of wood and couple hours of time are all you need to invest in this beautiful little project.

Craftsman-Style Clock 92
Straight-grained oak combined with simple lines make this a handsome project. But the ceramic tile really makes it stand out.

contents

TRAVELLER'S JOURNAL
INDIAN STYLE
TASCHEN

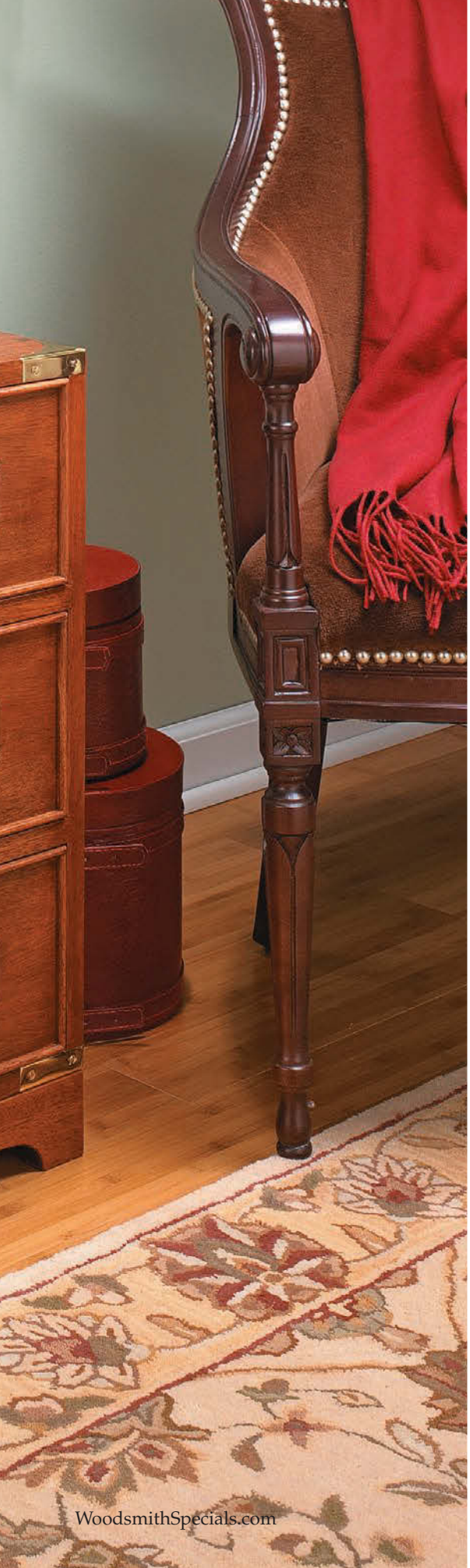

heirloom Furniture

Add some stylish furniture to your home with these unique projects. Each one also offers a great opportunity to put some different woodworking techniques to the test.

CRAFTSMAN LIBRARY DESK.....6

CAMPAIGN CHEST.....16

FARMHOUSE TABLES 24

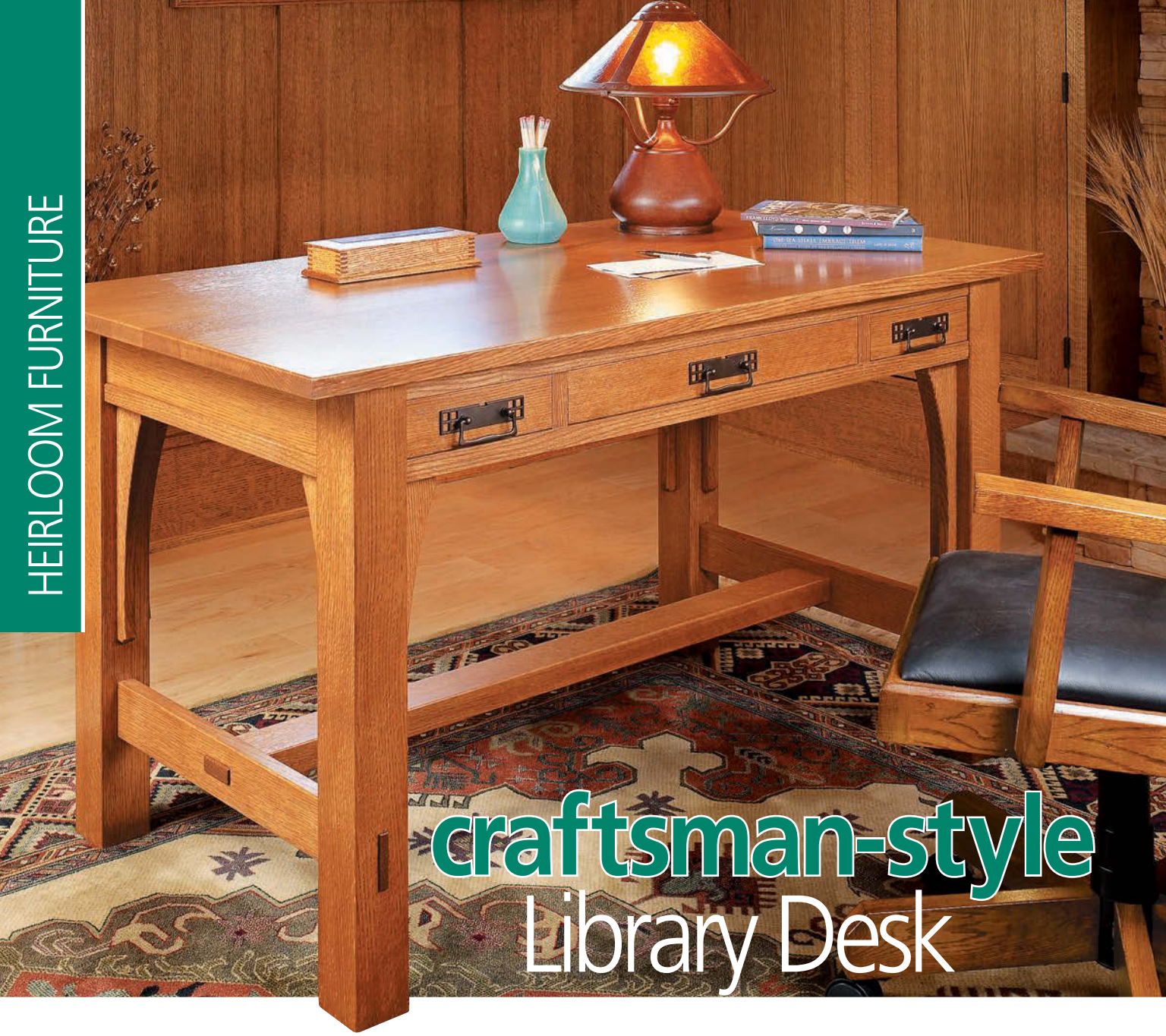

craftsman-style Library Desk

This classic project offers Craftsman design at its best. It's practical, simple in detail, and features solid, straightforward construction.

Craftsman-style furniture is always easy to recognize. That's because it's based on well established design philosophy. In a nutshell, the basic principles are that furniture should be simple in design, highly practical, and built to pass down from generation to generation. And one look is all you need to tell that the classic library table in the photo above hits the mark.

The Craftsman heritage of our table is unmistakable. It starts with a solidly built frame that supports a beefy top. The square, gently eased edges create clean, crisp lines. The minimal amount of aesthetic detail is added by the appearance of through-tenon joinery and the gracefully shaped corbels atached beneath the upper rails.

But here, form follows function. This table is meant to fulfill a purpose and the possibilities are pretty wide open. The spacious top provide plenty of display space or a comfortable work surface. When you consider the three shallow drawers for storage, the library table is a good candidate for use as an accommodating desk.

But all this aside, what appeals to me most about this project is the time spent building it. As it should be, the construction is very down to earth — just traditional joinery and techniques that will give your woodworking skills a good workout. And in the end, you'll have a treasured heirloom that looks great and will serve you well today and far into the future.

Construction Details

OVERALL DIMENSIONS:
54"W x 30"H x 28"D

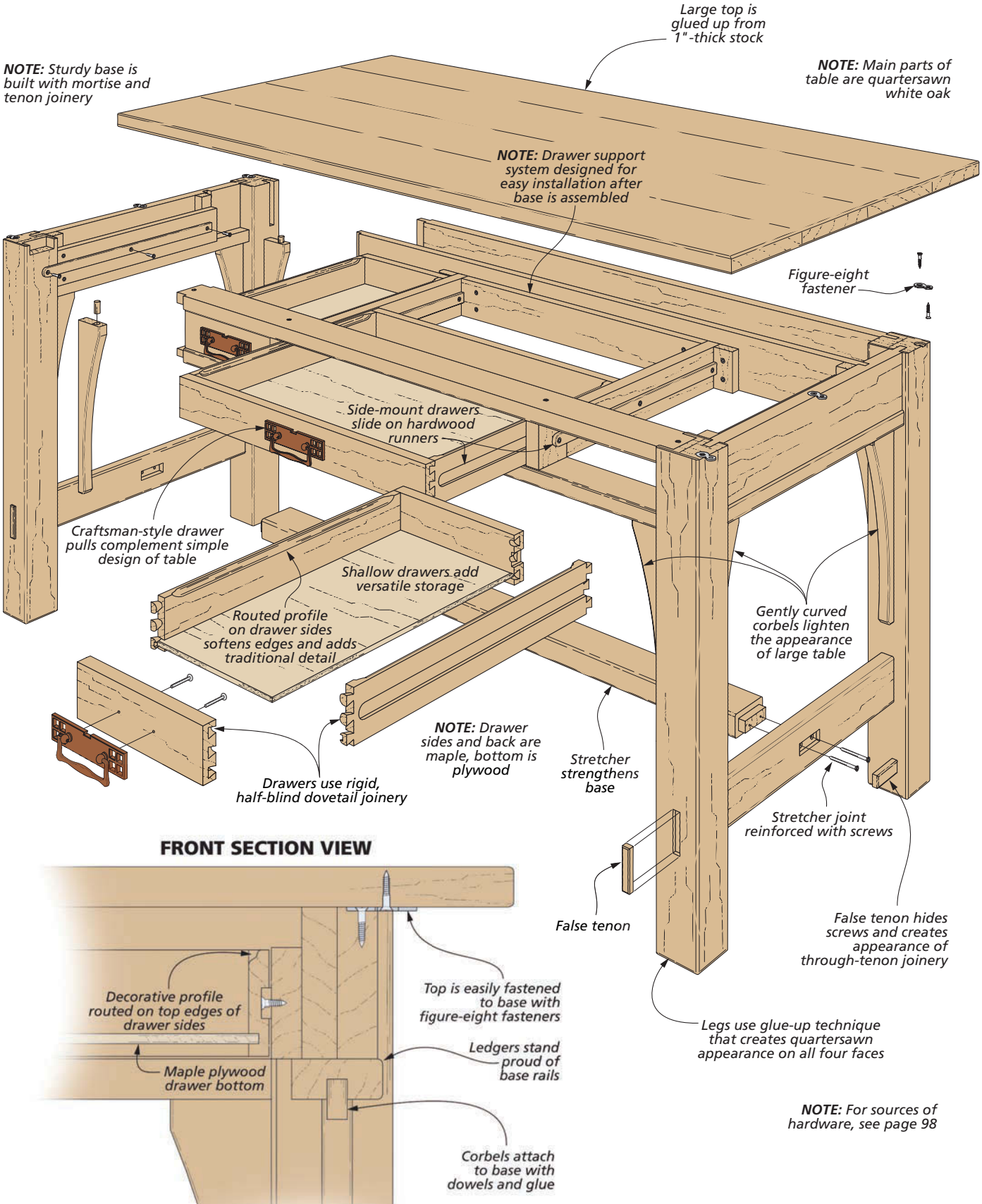

NOTE: For sources of hardware, see page 98

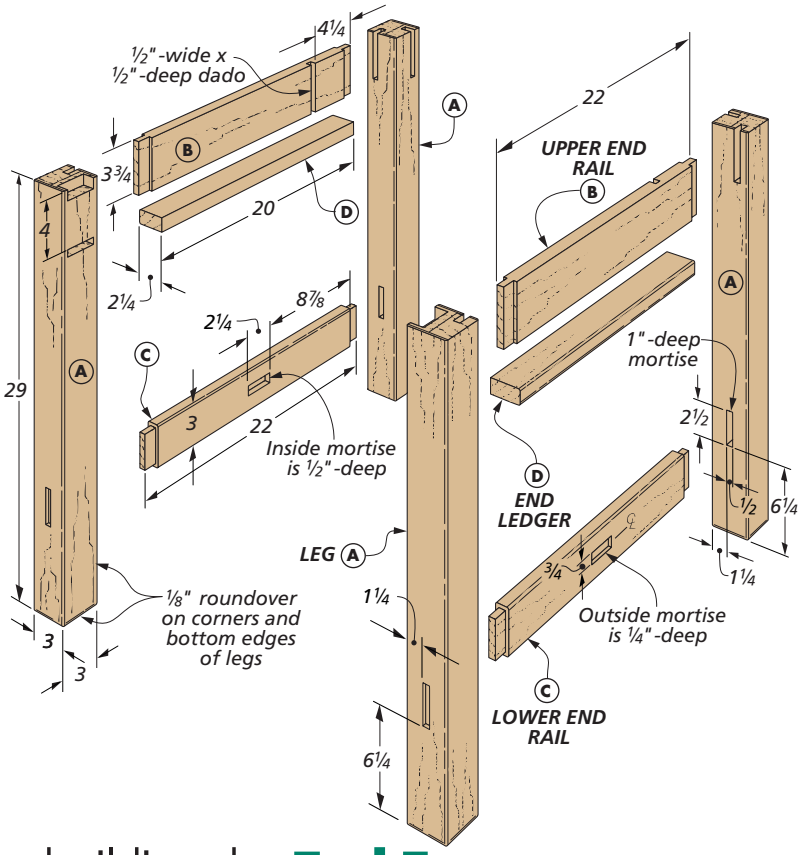

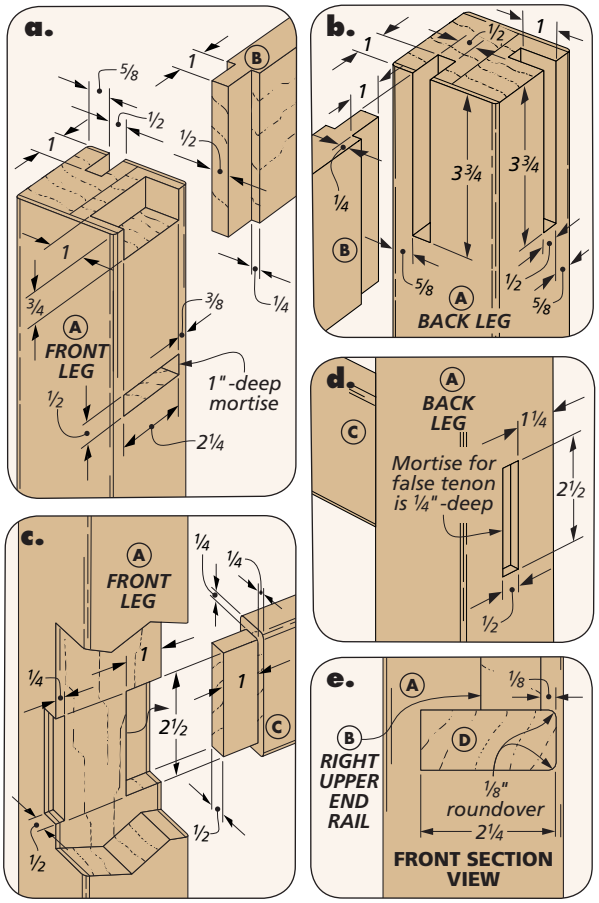

building the **End Frames**

I decided that the easiest way to build the table was to start by assembling the two, basic end frames. Then you can quickly complete the sturdy base by adding the front and rear rails, the center stretcher and all the details.

LEGS FIRST. Each end frame consists of two legs, a two–piece upper rail and a lower rail, as shown above. To begin, you'll need to make the four, 3"-square legs. As you can imagine, this requires gluing up blanks from thinner stock. But this also gives you the opportunity to make a better-looking leg. I used a traditional Craftsman technique to make leg blanks that show quartersawn figure on all four faces with no noticeable joint lines.

The simple process is laid out in the box below. In a nutshell, you're going to glue up a two-piece blank and then "skin" the joined sides with thin facings. The result is definitely worth the extra effort.

MORTISES. Once the leg blanks are completed and cut to length, you can go to work on the joinery. The end rails and the front and back rails are all connected to the legs with mortise and tenon joints. So cutting all the mortises in the legs is the first step.

If you take a look at the drawing above, you'll see that each leg has

How-To: Make a Craftsman Leg

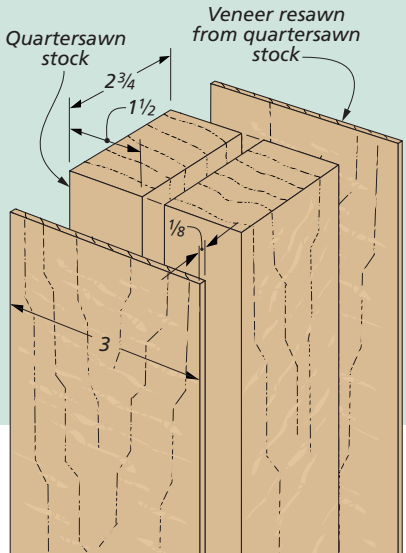

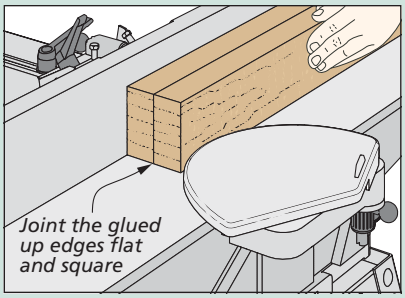

Size the Blank. After gluing up a wide blank from 1½"-thick stock, rip and then joint the blank down to 2¾" wide.

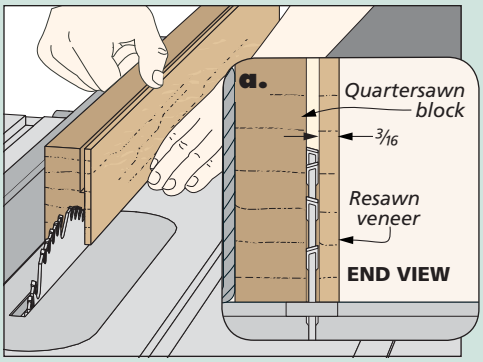

Resaw the Veneers. Now you'll need to resaw veneers from quartersawn stock. They should be slightly over width and over thickness.

multiple mortises. And even though you're just working on assembling the end frames at this point, you'll want to lay out and cut all the leg mortises now. This includes the mortises for the front and back rails that are added later.

THE WORK. The goal is to end up with two, mirror-image pairs of legs (front and back). So your first concern is laying out the mortises correctly. Then drilling them out at the drill press and cleaning them up at the bench will be pretty routine.

Before getting started, let me give you a rundown of what needs to be done. As you can see in detail 'b' on the opposite page, the end rails and back rail fit into off-center, open-end mortises. The drawings at right offer a tip for making these.

I created a classic, through-tenon look on the lower end rails by using a simple, false-tenon technique. This requires cutting a 1"-deep mortise centered on the inside face of the leg and a shallow mortise on the opposite face that holds the false tenon (detail 'c').

Finally, the front legs each need two "horizontal" mortises on the front inside face for the upper and lower drawer rails (detail 'a,' left).

THE END RAILS. After completing the mortises, you'll be ready for a change of pace. Making the upper end rail assembly and the lower end rails will provide it. This work is pretty straightforward, but there are a few things to explain.

As you know, both rails are tenoned into the legs. The upper rail gets a two-shouldered tenon, the lower end rail needs a four-shouldered tenon (details 'a' and 'c'). A dado blade in the table saw will handle the job. And while the dado blade is on the saw, you can cut a ½"-wide dado across the inside face of both upper end rails (main drawing). Later, this will hold an interior rail that support the drawers.

You also need to make separate horizontal ledger pieces that fit beneath the upper rail (detail 'e' at left). The ledger sits proud of the rails to create added visual interest. It will be cut to fit between the legs and glued in place, after the legs and rails are assembled.

A FEW MORE MORTISES. Completing the lower rails will take you back to the drill press and bench for a few more mortises, see the main drawing on the opposite page. These mortises are for the long, center stretcher that connects the two lower end rails. Here, I again used a simplified through-tenon technique. A ½"-deep mortise on the inside face captures the stretcher tenon and a separate ¼"-deep mortise on the outside fits the false tenon.

EASED EDGES. One more thing and then you can begin the assembly. I took a short trip to the router table to round over all the edges of the lower rails and the outside edges of the ledger blanks.

ASSEMBLY. According to the plan, all the end frame parts should be ready to assemble. First, I glued two legs and the upper and lower rails into a frame. Then, you can cut the ledger to fit the frame and glue it in place, as shown in detail 'e' on the opposite page.

Shop Tip: Two-Step Mortises

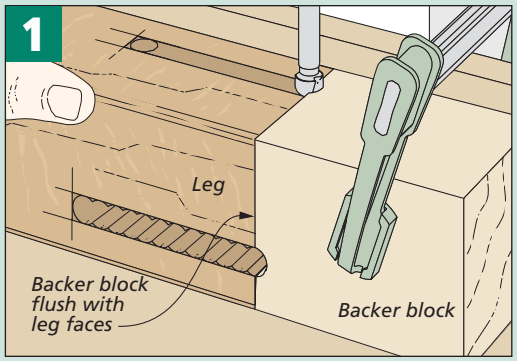

Drill Out the Waste. Start the mortises at the drill press by drilling out most of the waste. Use a backer block at the open end to keep the drill bit on track.

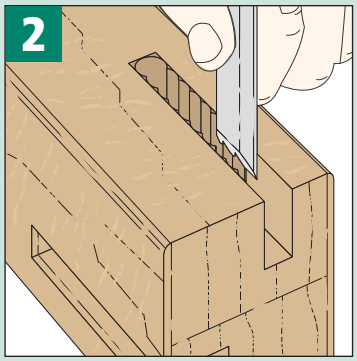

Cleanup. A chisel will complete the job. Pare away the remaining waste and square up the ends.

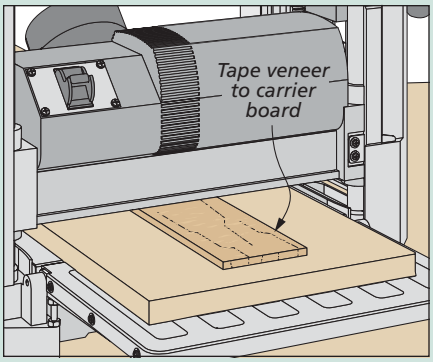

Plane the Veneers. Next, I planed the veneers to ⅛" thick by attaching them to a carrier board with double-sided tape.

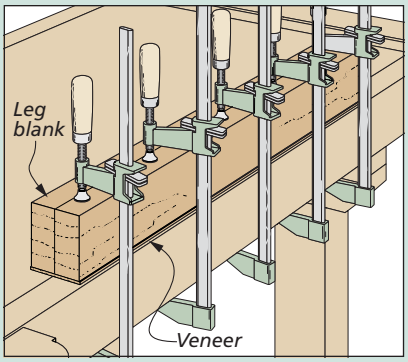

Glueup. You can glue the veneers to the joined edges using the workbench to distribute the clamping pressure.

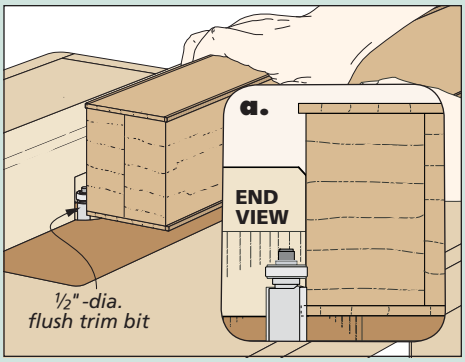

Flush Trim. To complete the legs, trim the veneers flush with the blanks and then rout a ⅛" roundover on all the long edges.

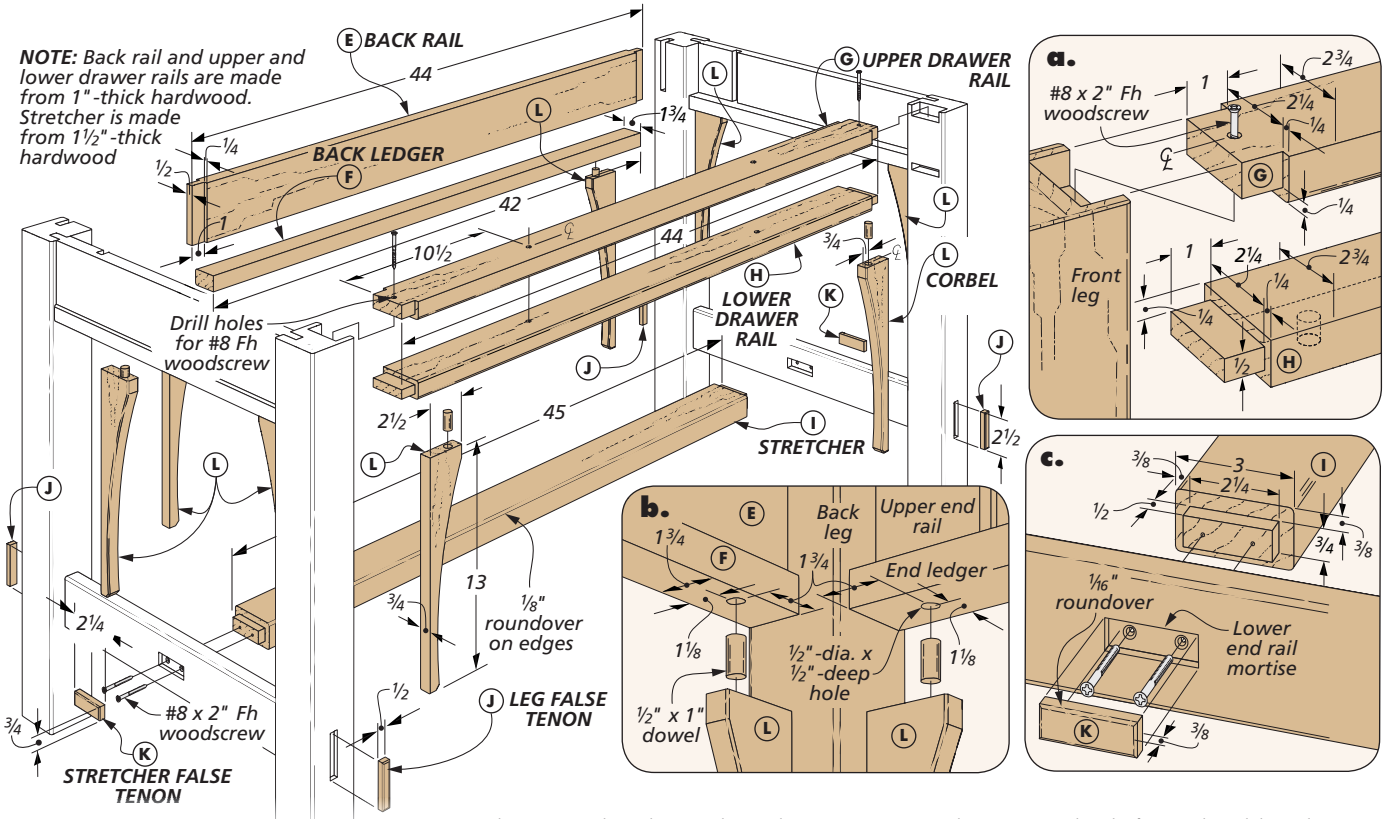

completing the **Base**

With the end frames assembled, you can start on stage two of the construction. This involves making and installing the miscellaneous parts that complete the base. You'll add the back rail and drawer rails, the long center stretcher, the corbels, and the false tenons.

DRAWER RAILS & BACK RAIL. Fitting the back rail and the drawer rails to the end frames is the first step. Since the mortises in the legs have been completed, you're already halfway home on this chore. The only minor complication is that the tenons on each piece are slightly different. A look at the box below will help avoid any confusion.

The back rail has the same two-piece design as the upper end rails. First, cut the back rail to size. Then cut a two-shouldered tenon on each end (first drawing below). The ledger is cut to width and rough length and the edges rounded over.

The two drawer rails are likewise, easy to fit. But as I mentioned, the tenons you'll cut on each one are a little bit different. The upper drawer rail has a three-shouldered tenon while the lower rail has a standard, four–shouldered tenon (detail 'a' above).

SCREW HOLES. Later on, you're going to add the interior support system for the three drawers. This includes two vertical divider/support rails that fit between the drawer rails. They're fastened with screws installed through the rails. So it would be a good idea to drill the countersunk screw holes in the rails before assembly.

CENTER STRETCHER. Next comes the center stretcher. Again, this part simply gets a tenon on each end. But since the stretcher fits between the lower end rails, the trick is getting the shoulder-to-shoulder length right.

How-To: Cut the Tenons

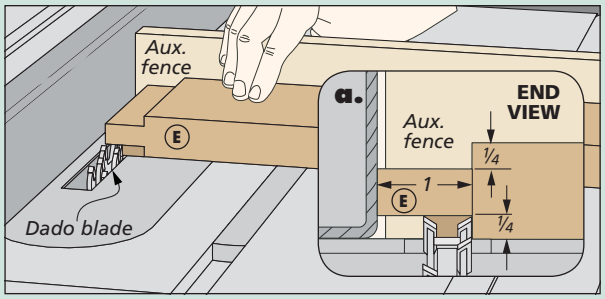

The Back Rail. The back rail requires a two-shouldered tenon. After setting the rip fence to gauge the length, raise the blade between passes to sneak up on the thickness.

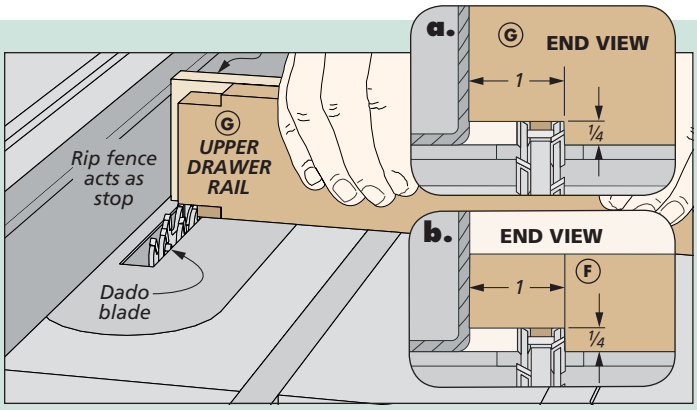

Upper Drawer Rail. The upper drawer rail has tenons with three shoulders. Here, I cut the front and back shoulders first. Then I cut the thicknesss of the tenon to match the depth of the mortise.

For more information on dowel joinery and making false tenons, visit our website: WoodsmithSpecials.com

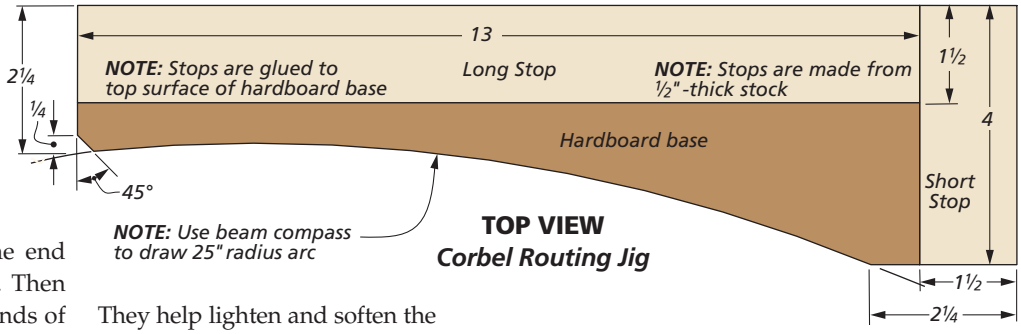

To do this, I dry fit the back rail and the drawer rails between the end frames and took a measurement. Then when you cut the tenons on the ends of the stretcher, simply sneak up on a tight fit, testing the "shoulder-to-shoulder" length to the dry fit base.

ROUNDOVER. With the stretcher fit, you need to make a return trip to the router table before assembling the base. All the edges on the stretcher and the outside edges of the drawer rails and the back ledger need a ⅛" roundover.

ASSEMBLY. The assembly will go easier if you take it in small bites. I glued the rails and stretcher to one end frame, then the other. The final step is to reinforce the upper drawer rail and the stretcher joints with screws (details 'a' and 'c').

CRAFTSMAN DETAILS. Structurally, the base is complete. But you still need to finish up the "period" details — the false tenons and the corbels.

FALSE TENONS. The false tenons for the legs and those for the stretcher are different sizes, but otherwise, making them is pretty easy. Check out the Online Extras for a detailed explanation. When they're ready, you can glue them into the mortises, leaving them ⅛" proud.

THE CORBELS. The gracefully shaped corbels I added to the base are a distinctive feature of Craftsman-Style furniture. They help lighten and soften the heavy look of the table.

The base requires eight, identical corbels. And being a focal point, I wanted them to be smoothly shaped and consistent. So rather than shape each corbel by hand, I made a template routing jig.

CORBEL JIG. The corbel jig is illustrated in the drawing at the top of the page. It's just a simple sled that used to both lay out the profile and rout it to shape. The steps for using it are shown in the box on the right. Before adding the corbels to the base, you'll rout a roundover on all the outside edges.

THE FINISHING TOUCH. When you attach the corbels, you want to center them on the thickness of the leg. The long edge can simply be glued to the legs. The top end needs to be doweled to the ledger or drawer rail (detail 'b,' opposite page). You'll find more information in the Online Extras article at *Woodsmith Specials.com*.

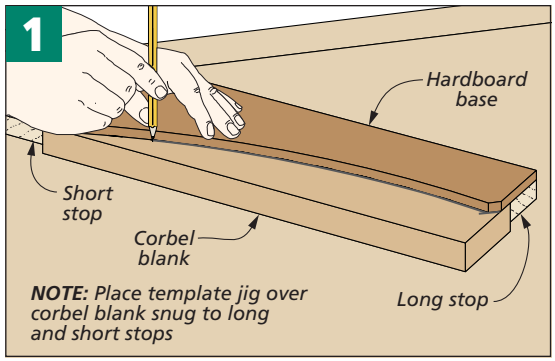

Trace the Shape. After cutting the eight corbel blanks to width and length, use the template jig to trace the finished shape onto each blank.

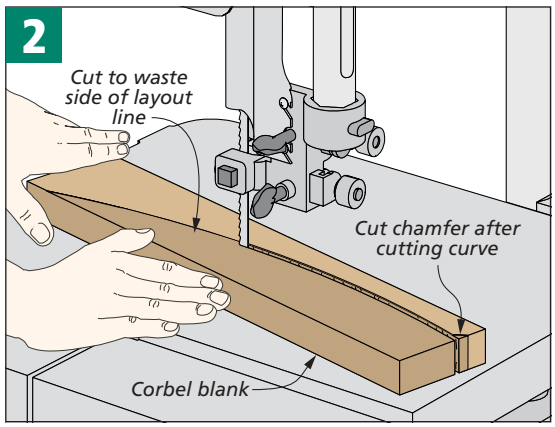

Rough Cut Each Blank. Next, take the blanks to the band saw and cut them to rough shape. Stay about 1/16" to the outside of the layout line.

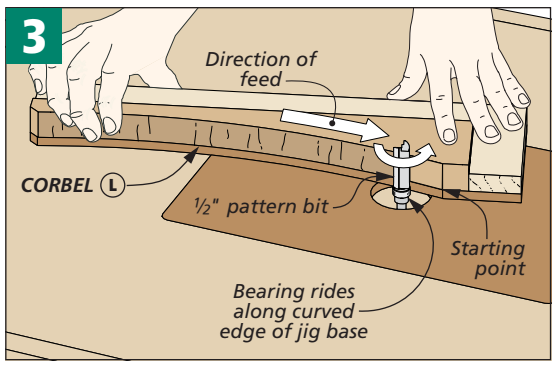

Flush Trim. Finally, I secured the blank in the jig with double-sided tape and trimmed the rough edge using a pattern bit. Rout "downhill" starting at the wide end.

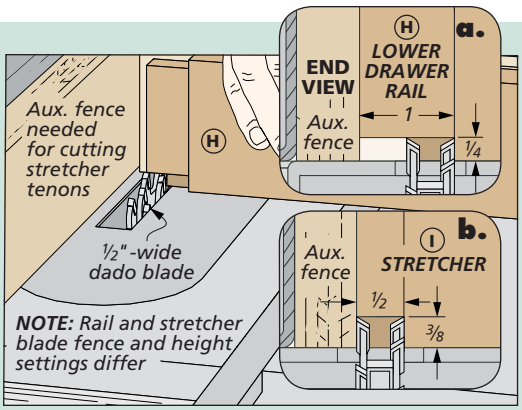

Four Shoulders. The lower drawer rail and stretcher need four-shouldered tenons. Cut the cheeks, then stand the pieces on edge to cut the shoulders.

Distinctive. False tenons create a traditional through-tenon look.

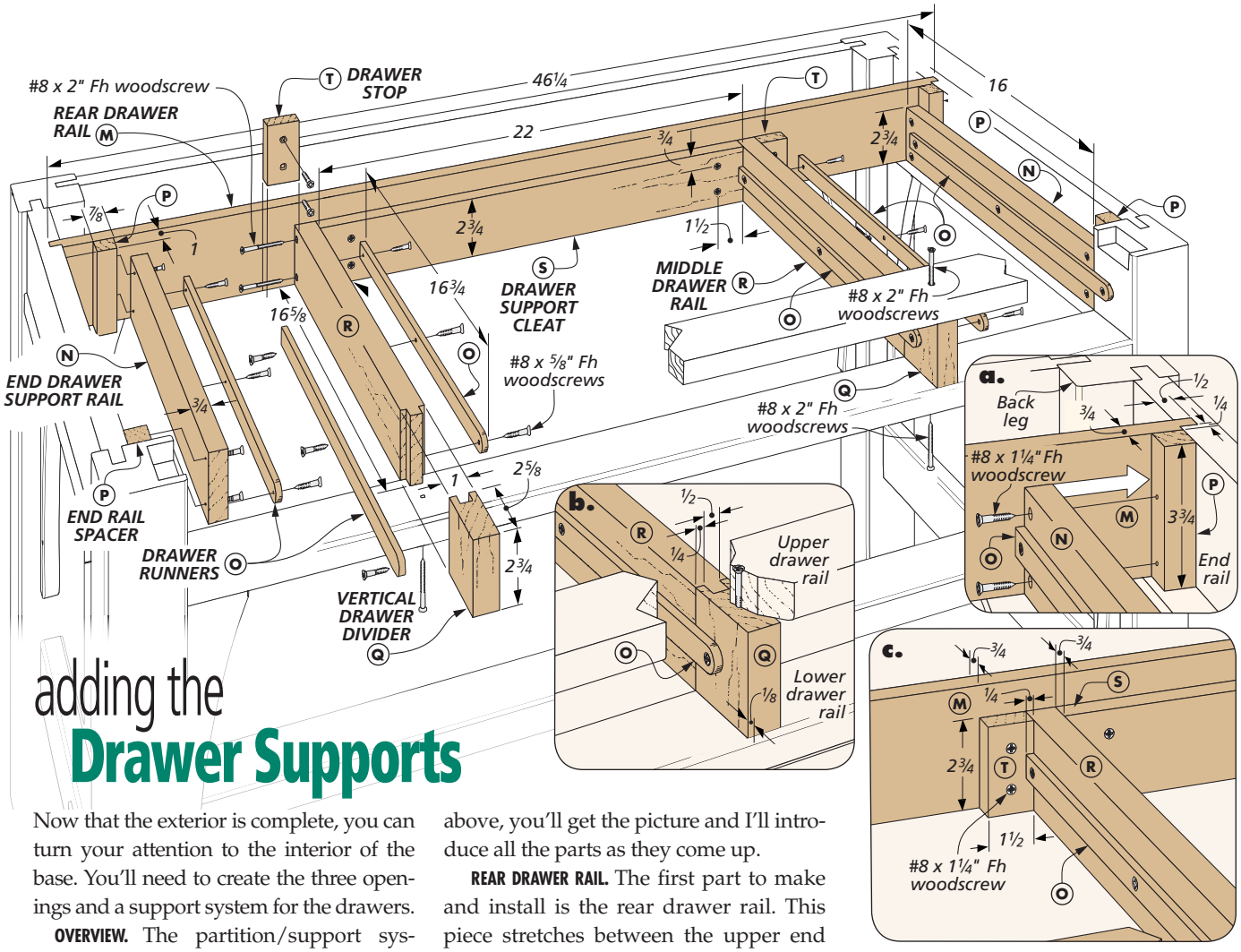

adding the Drawer Supports

Now that the exterior is complete, you can turn your attention to the interior of the base. You'll need to create the three openings and a support system for the drawers.

OVERVIEW. The partition/support system has a fair number of parts, but it's designed to go into the assembled base very easily. The side-mount drawers slide on thin runners installed on a sturdy, interior framework. No bottom support is needed. If you take a look at the drawing above, you'll get the picture and I'll introduce all the parts as they come up.

REAR DRAWER RAIL. The first part to make and install is the rear drawer rail. This piece stretches between the upper end rails to anchor the drawer support system. A short tongue cut on each end fits the dadoes you cut earlier in the end rails. You can simply apply glue to the tongues and then slide the rail into the dadoes from the top.

SUPPORT SYSTEM. With the long rail in place, you can start adding the drawer support rails and runners. You'll need to install a rail at each end and a middle assembly that forms the drawer openings.

How-To: Drawer Runner Details

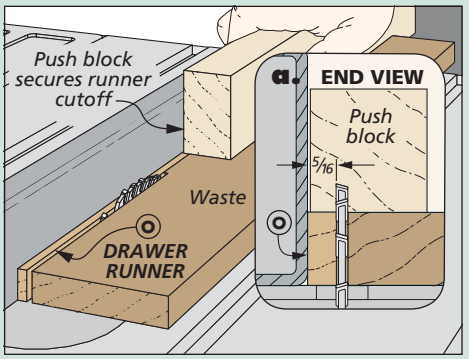

Rip to Size. To begin making the drawer runners, rip them to rough thickness from ¾" stock. Then plane them to ¼" thick.

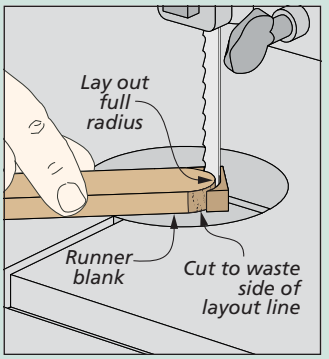

Round Ends. After cutting the runners to length, round one end. Then sand it smooth.

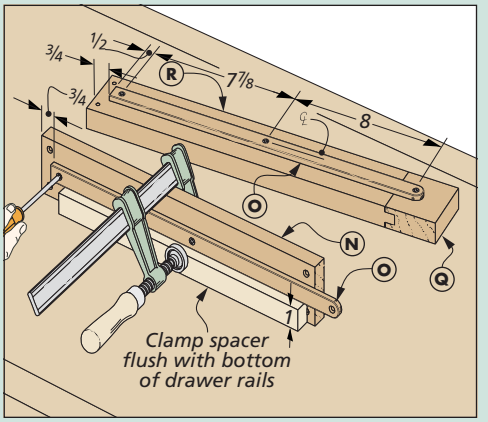

Attach the Runners. A spacer clamped to the rail will help position the runner while you install screws through pre-drilled, countersunk holes.

I worked on the two end pieces first. These are simply cut to fit between the front leg and the rear support rail. They're attached by screwing them to spacers glued to the upper end rails (detail 'a' on the opposite page). They should sit flush to the inside edge of the leg.

RUNNERS FIRST. But before attaching the rails to the frame, I made the drawer runners and pre-installed them. This is much easier than trying to accurately position and screw them in place afterward.

The runners are ¼"-thick by ¾"-wide strips that are rounded on the front end. You'll need six in total, so I would make them all at once. The box at the bottom of the opposite page shows how to do the job. Note that the runners are positioned ¾" away from the back end of the rails. They'll lap onto the front legs so they can be screwed to them.

MIDDLE SUPPORTS. The middle rail assembly is a little different. Starting at the front, you have a pair of vertical dividers screwed between the drawer rails. The middle drawer rails are joined into the back edge of the dividers. Then a runner is attached to either side of this assembly (detail 'b,' opposite). The drawer rails are sized to butt up to the rear support rail and are held fast by screwing them to the ends of a support cleat. This cleat doubles as a drawer stop.

THE CONSTRUCTION. The nice thing about this design is that the whole thing can be preassembled and then added to the base. And I built it just as I described it, from front to back. The vertical dividers start out as an extra-long blank. This makes it easier to cut a groove in the back edge, as shown in the Shop Tip above. Once the groove is completed, you can cut two dividers to length.

I cut the support rails to width, but left them extra long. Once a tongue is cut on the front end (drawing above), and the rail is glued to the divider, you can trim each assembly to final length. Just note that the dividers are recessed from the edges of the drawer rails.

Now, you can add a drawer runner to each side of the assemblies. Make sure to space the runner away from the rear end (details 'b' and 'c,' opposite). Finally, the support cleat can be cut to size and the assemblies screwed to either end.

THE INSTALLATION. A look at the drawings below will help you understand the support installation. The key is to get it positioned correctly. The small drawer openings should be equal, with the rails square and aligned in the base. Take a few minutes to check, adjust and double-check before installing the screws in the vertical dividers and the support cleat.

There's one more quick task before moving on. The small drawer openings need stops. These are just small blocks that butt up to the middle drawer rails and are attached to the rear support rail with screws. This is shown in detail 'c' on the opposite page.

Shop Tip: Centered Tongue & Groove

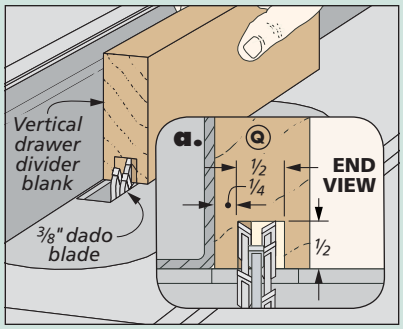

Groove. I used a dado blade to cut a groove on the divider blank. Flip the blank end for end between passes.

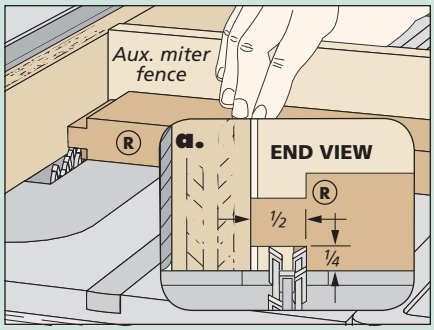

Tongue. You can use the same dado blade to cut a mating tongue on the rails. The rip fence will gauge the length of the tongue.

Install the Middle Support

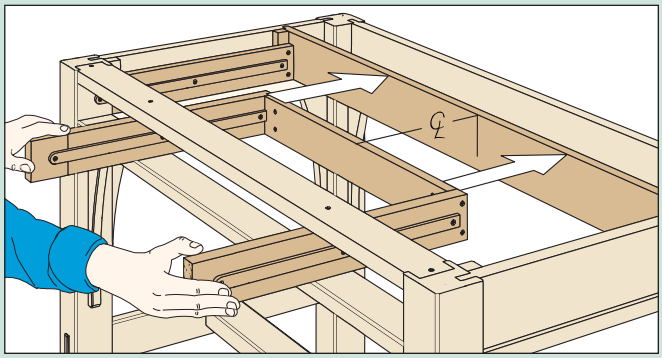

Slide It into the Base. After attaching the two rail assemblies to the support cleat, the entire assembly can be inserted between the drawer rails and temporarily held in place with a clamp or two.

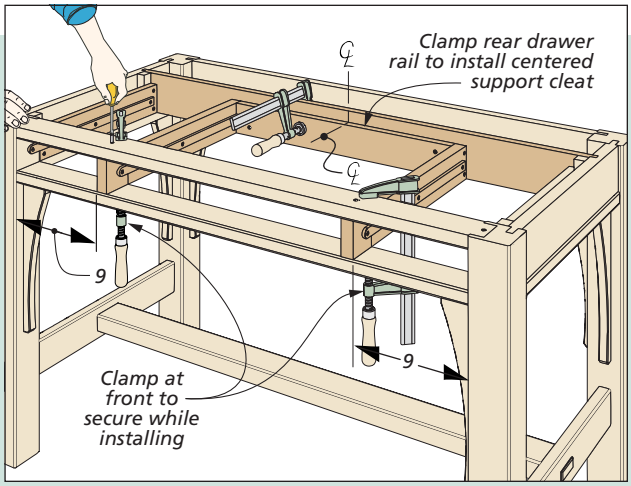

Adjust & Fasten. Before installing the screws, you'll want to carefully adjust the position of the assembly and make sure the drawer openings are square and level.

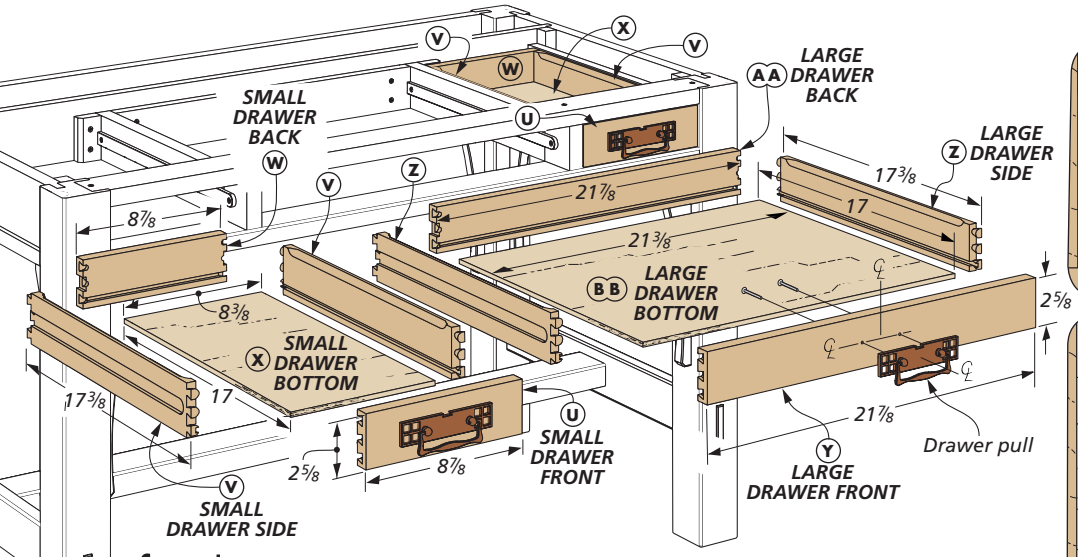

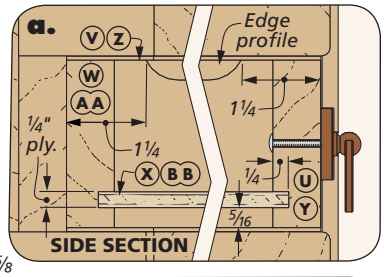

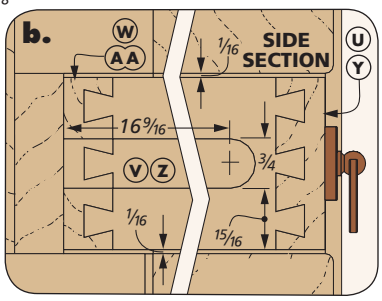

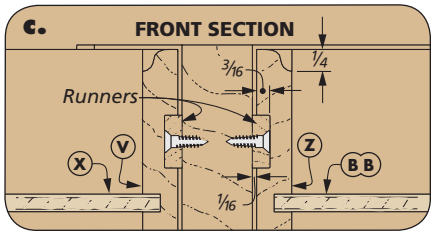

finishing up Drawers & Top

With the base completed, you're down to a few important details. Making the three drawers and then the top will wrap things up.

THE DRAWERS. The drawers have three features that guide the work you'll do. First comes the half-blind dovetail joinery used to build the boxes. Second, I added an authentic period detail by routing a profile on the top inside edge of the drawer sides. And finally, you'll need to rout grooves in the sides to fit the runners in the base.

DOVETAILS. Before you can get started on the dovetail joinery, you'll need to cut all the parts to size. I sized the drawers to have a 1/16" gap on all sides and to sit flush with the vertical dividers.

Once the parts are ready, you can set up your jig and get to work on the dovetails. As shown at left, they're laid out with a standard spacing (7/8" on centers).

PROFILE. After cutting grooves for the plywood bottoms at the table saw, I took the sides to the router table to add the decorative profile. The profile is routed using a small ogee bit and is "stopped" short of the ends. To do this, I set up the router table with stop blocks clamped to the fence, as shown below. This allows you to make the cuts without trying to rout to a line. You'll avoid the burning that often occurs during a slow cut.

RUNNER GROOVES. After sanding the routed profiles, the drawers can be assembled and you can move on to the final step — routing runner grooves in the drawer sides. I routed the stopped grooves with a single pass using a sharp 3/4"-dia. straight bit. The goal is centered grooves that are consistently positioned from side to side. The second and third drawings in the box show the trick. I trapped the drawer between the fence and a straightedge and made the two cuts feeding in opposite directions. This way the cuts on both sides can be referenced from the top edge.

It's a good idea to rout a test piece to check the accuracy of the setup before

DOVETAIL LAYOUT

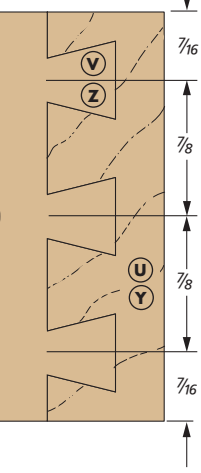

How-To: Drawer Details

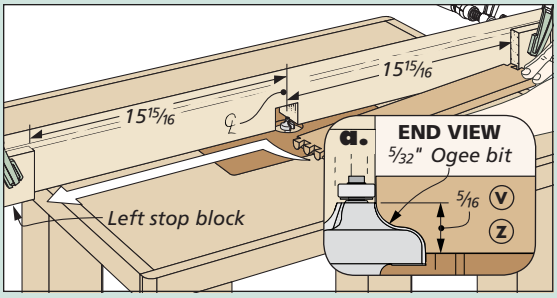

Stopped Edge Profile. To rout the stopped ogee profile, butt the drawer side up to right stop block, plunge into the bit and rout to the left stop block.

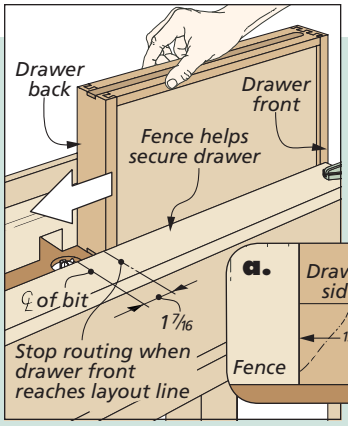

Routing the Grooves. Feed in the usual right to left direction to rout the groove on one side.

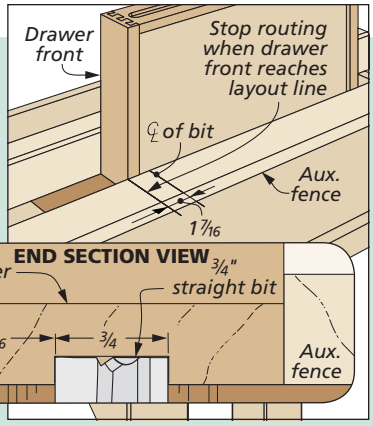

Opposite Direction. To rout the groove on the opposite side, you'll need to feed from left to right.

routing the drawers. When the drawers are fit to your satisfaction, the pulls can be installed. And this leaves just one thing to do — make the top.

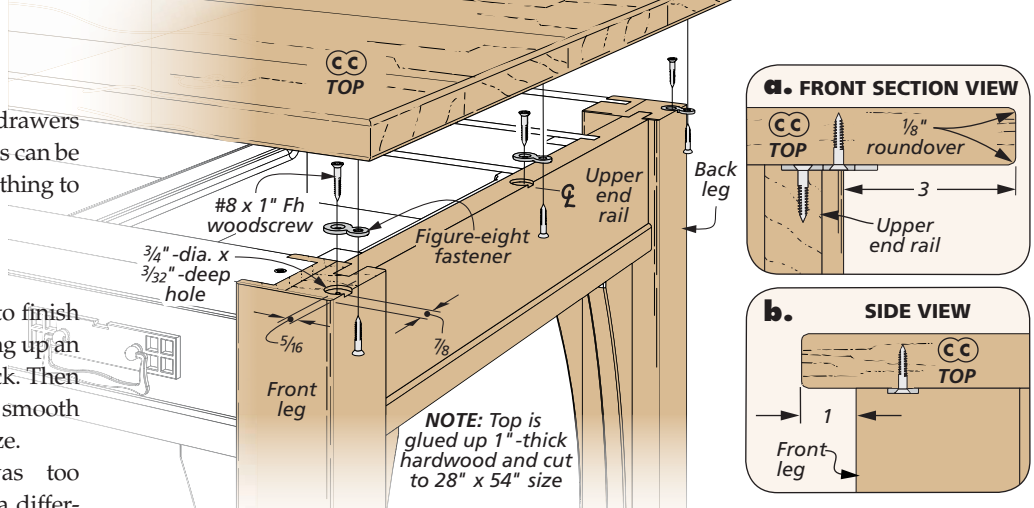

THE TOP

Adding the top is a relaxed way to finish up the table. You can start by gluing up an oversized panel from 1"-thick stock. Then take some time to clean up and smooth the top before cutting it to final size.

CUT TO SIZE. The heavy panel was too large for my table saw, so I took a different route. First, I cut it to rough size with a circular saw. Then I used a router, a straightedge and a flush-trim bit to trim it to finished size. Finally, I switched to a roundover bit to ease the edges.

THE LAST CHORE. Now you can install the top on the base. The inside of the base has limited access, so I mounted the top with figure-eight fasteners positioned around the perimeter, as shown above. I mortised one into the top of each leg and one in the center of each end rail (details 'a' and 'b'). The mortise is just a shallow hole drilled with a Forstner bit (main drawing).

After screwing the fasteners to the legs, you can position the top on the base and mark for pilot holes. The top should be centered with a 3" overhang on each side and 1" overhang front and back.

Once the top is screwed down, you can take a short break and start thinking about a finish. I suggest a good, durable varnish. After all, your library table will be around for a long, long time.

MATERIALS, SUPPLIES & CUTTING DIAGRAM

A	Legs (4)	3 x 3 - 29
B	Upper End Rails (2)	1 x 3¾ - 22
C	Lower End Rails (2)	1 x 3 - 22
D	End Ledgers (2)	1 x 2¼ - 20
E	Back Rail (1)	1 x 3¾ - 44
F	Back Ledger (1)	1 x 1¾ - 42
G	Upper Drawer Rail (1)	1 x 2¾ - 44
H	Lower Drawer Rail (1)	1 x 2¾ - 44
I	Stretcher (1)	1½ x 3 - 45
J	Leg False Tenons (4)	½ x 2½ - ⅜
K	Stretcher False Tenons (2)	¾ x 2¼ - ⅜
L	Corbels (8)	¾ x 2½ - 13
M	Rear Drawer Rail (1)	¾ x 3¾ - 46¼
N	End Drawer Support Rails (2)	¾ x 2¾ - 16
O	Drawer Runners (6)	¾ x ¼ - 16¾
P	End Rail Spacers (4)	1 x ⅞ - 3¾
Q	Vertical Drawer Dividers (2)	1 x 2⅝ - 2¾
R	Middle Drawer Rails (2)	1 x 2¾ - 16⅝
S	Drawer Support Cleat (1)	¾ x 2¾ - 22
T	Drawer Stops (2)	¾ x 1½ - 2¾
U	Small Drawer Fronts (2)	¾ x 2⅝ - 8⅞
V	Small Drawer Sides (4)	½ x 2⅝ - 17⅜
W	Small Drawer Backs (2)	¾ x 2⅝ - 8⅞
X	Small Drawer Bottoms (2)	¼ ply. - 17 x 8⅜
Y	Large Drawer Front (1)	¾ x 2⅝ - 21⅞
Z	Large Drawer Sides (2)	½ x 2⅝ - 17⅜
AA	Large Drawer Back (1)	¾ x 2⅝ - 21⅞
BB	Large Drawer Bottom (1)	¼ ply. - 17 x 21⅜
CC	Top (1)	1 x 28 - 54

- (14) #8 x 2" Fh Woodscrews
- (16) #8 x 1¼" Fh Woodscrews
- (12) #8 x 1" Fh Woodscrews
- (18) #8 x ⅝" Fh Woodscrews
- (3) Dark Bronze Bail Pulls w/Screws
- (6) Figure-Eight Fasteners

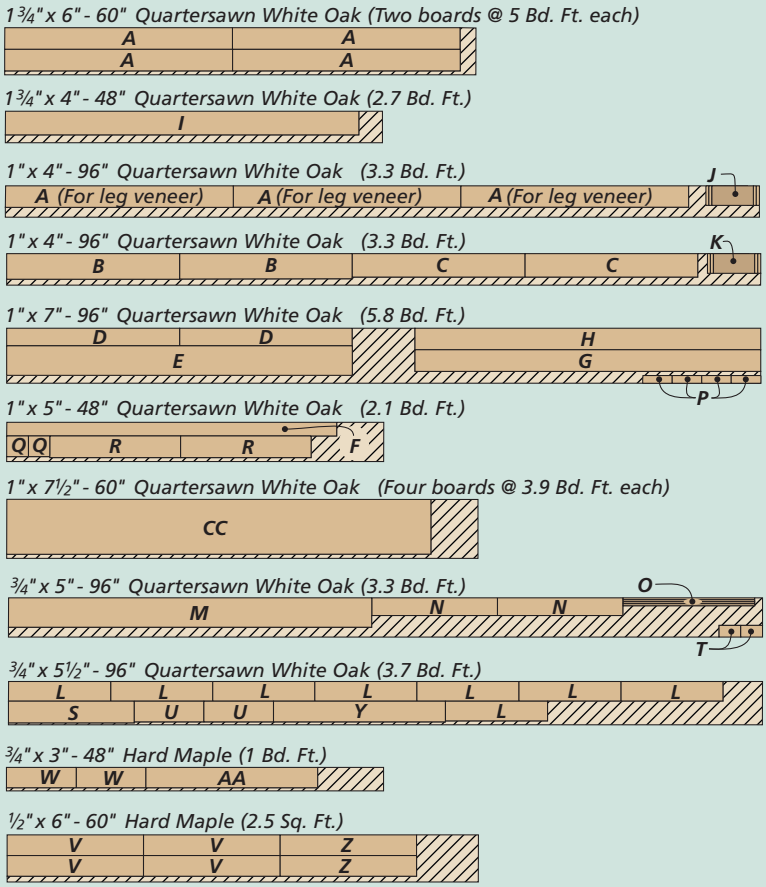

***ALSO NEEDED**: One 24" x 48" sheet ¼" Maple plywood*

dovetailed Campaign Chest

Packed with traditional details, you can build one of these chests, or stack two of them to add style and storage to your home.

From a woodworker's perspective, this project has a little bit of everything — dovetails, mortise and tenon joinery, veneer work, classic molding, and period-correct hardware. All of this makes it a nice challenge to build.

There's also some interesting history behind this project. Campaign furniture was designed to provide 19th-century military officers with rugged, versatile storage that could be packed up and moved easily.

Although you probably aren't on the move, no doubt your house could use more storage. And you'll find that the solid construction and eye-catching details of this project make it ideal for today's home.

Construction Details

OVERALL DIMENSIONS:
24"W x 24⅜"H x 66"D

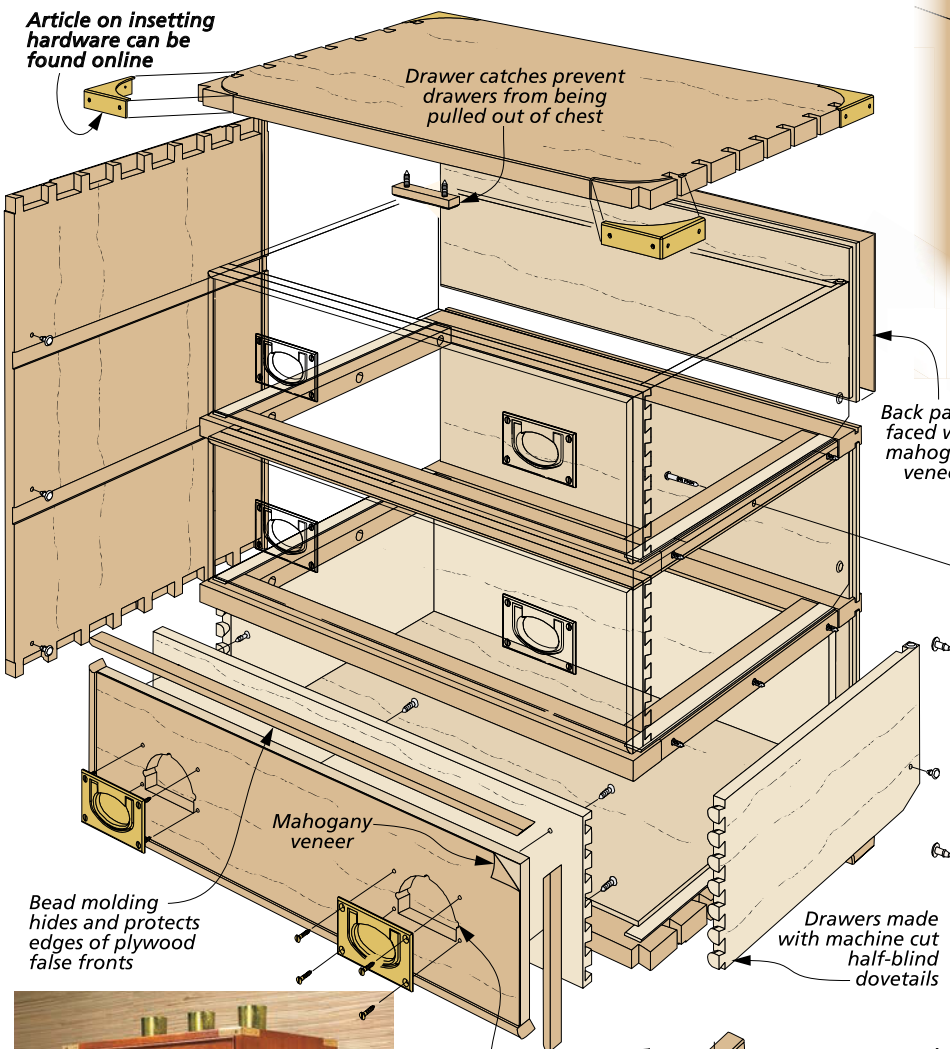

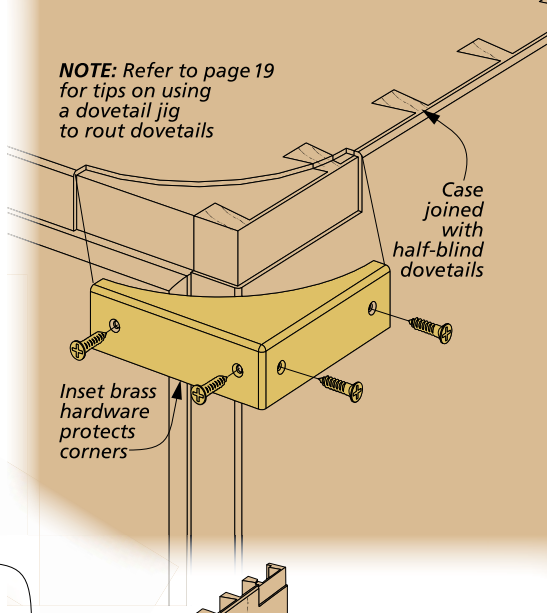

GO 2 Online Extras

For articles about cutting half-blind dovetails and insetting hardware, go to: WoodsmithSpecials.com

NOTE: Refer to page 98 for hardware sources

Stackable. Double the storage without taking up any more floor space by stacking a second chest on top.

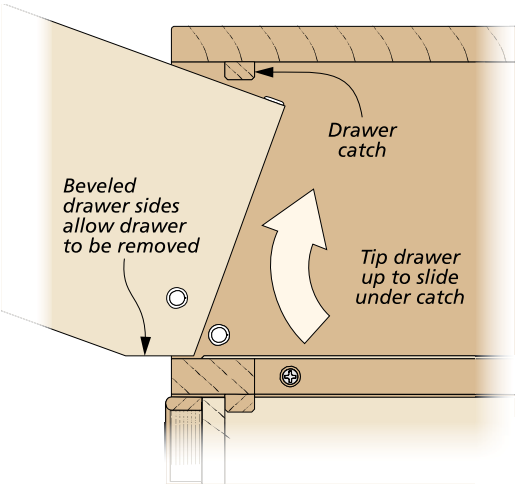

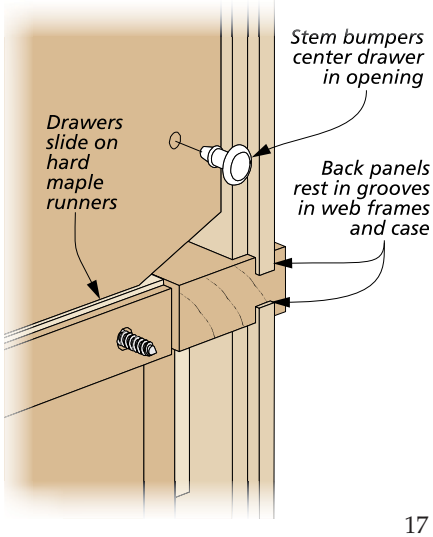

a dovetailed **Case**

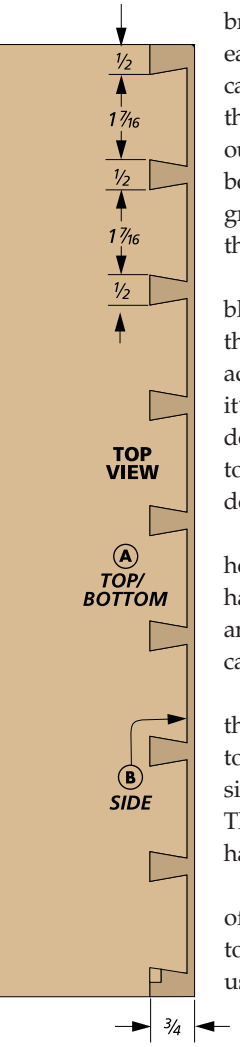

Building the campaign chest breaks down nicely into three, easily managed sections: the case, the web frames, and the drawers. The case starts out as an open, dovetailed box with a few dadoes and grooves, as in you can see in the drawing at right.

HALF-BLIND DOVETAILS. The half-blind dovetails I used to join the case parts have two big advantages. The first is that it's a very sturdy joint. The dovetails pull the two parts together, and you almost don't need glue.

The other advantage lies in how this joint looks. Exposed half-blind dovetails stand out and give an otherwise simple case real visual appeal.

To get started on building the case, I sized the top, bottom, and sides to the dimensions shown in the drawing. The next step is to cut the half-blind dovetail joints.

JOINERY. You have a couple of options when it comes to making the dovetails. I used an adjustable dovetail jig. For some tips on getting the best results using a dovetail jig, take a look at the short article on the next page.

You can also make the dovetails without a jig. If you go to the Online Extras article, you'll find a step-by-step technique to guide you through the process.

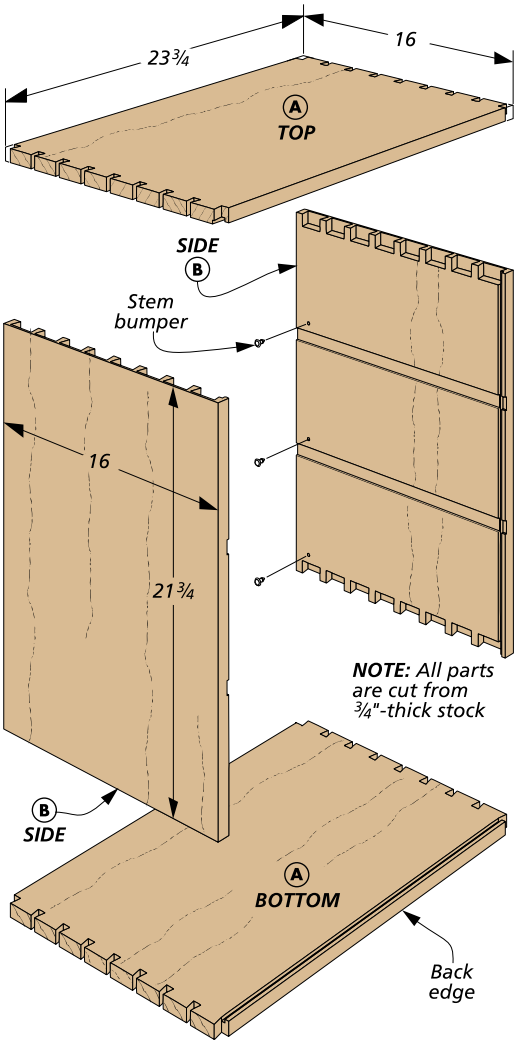

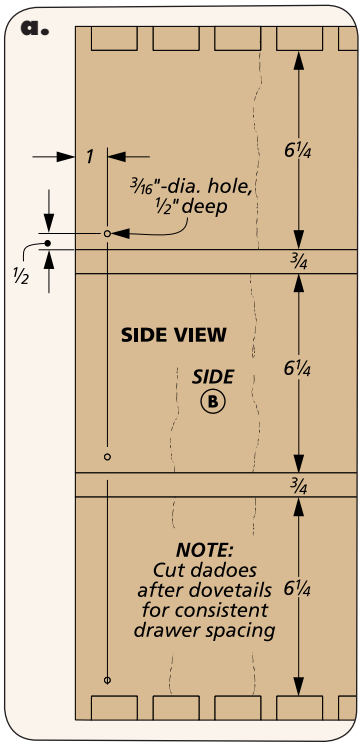

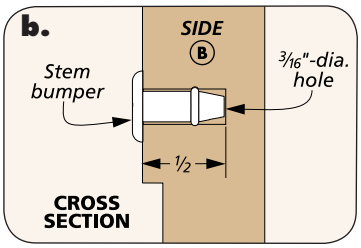

Don't be in a hurry to assemble the case after cutting the dovetails. There are still a few details you'll need to take care of.

DADOES & GROOVES. First, I cut some dadoes into the case sides that will capture the web frames, as illustrated in detail 'a' above. In the box at left, you'll see a way to quickly cut these on the table saw.

While you're at the table saw, you can cut a groove near the back of all the parts. This ¼"-wide groove will capture the back panels, as illustrated in detail 'b' at left.

The last thing to do on the case sides is to drill a few holes for some nylon stem bumpers that will be added later to guide the drawers.

For now, you can set the case pieces aside and make the drawer frames and back. To see how it's done, simply turn the page.

How-To: Cut Dadoes

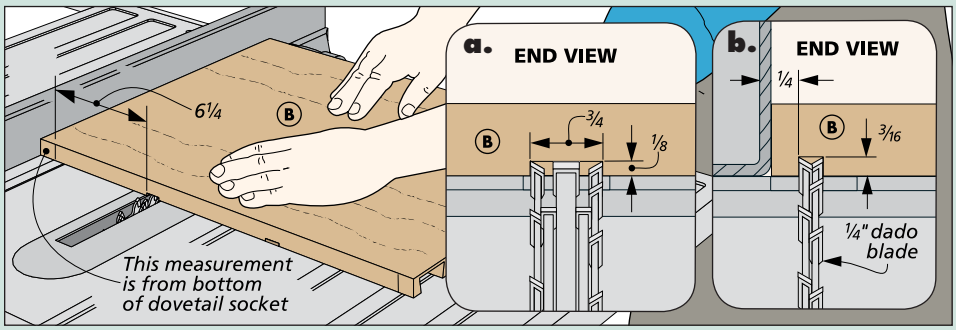

Single Setup. Since the dadoes are evenly spaced on the case sides, you can cut them without having to change the fence setting. All you have to do is make one cut then flip the board end for end and make the second pass. Then cut the groove for the back.

Routing the Dovetails

Using an adjustable dovetail jig (like the Leigh jig) to rout the half-blind dovetails in the case is a quick way to get tight-fitting joints. But if it's been awhile since you last used it, you may need a refresher course. So here are a few pointers to help you along the way.

First of all, unlike some jigs, the tails and pins are routed separately. So you'll need to label the pieces carefully. Along with that, routing each part uses a different side of the template (photos below).

The next thing to do is get the bit and guide bushing set up in your router. For the Leigh jig, the owner's manual specifies an exact bit and guide bushing combination to use for ¾"-thick stock (a 10° dovetail bit and a 7/16" O.D. guide bushing).

Tails First. It's a good idea to do a few test cuts on some scrap pieces that are the same thickness as the actual parts. This way, you can dial in the settings without wasting wood. I set up to rout the tails first, as you can see in the left photo below.

A gauge on the template shows you where to locate it in relation to the workpiece. I then cut some filler strips to fit between the fingers on the template to keep the bit from routing in the wrong place. Finally, I clamped a backer board behind the workpiece to prevent tearout.

Pins. Once the tails have been routed, you can turn your attention to the pins. The pin board is clamped horizontally in the jig, as in the right photo below.

Then the template is flipped over to guide the bit when routing the pins. To make sure the pin board is located in the right spot, I clamped an index board vertically in the jig. After routing the pins, you can check the fit of the joint. The box below will give you some advice on how to correct any problems.

Bit & Bushing. You'll need a 7/16" guide bushing and a 10° dovetail bit.

Routing Tails. Here's how the jig looks set up for routing the tails. I clamped a backer board behind the workpiece to prevent tearout. Wood spacers between the fingers guide the bit.

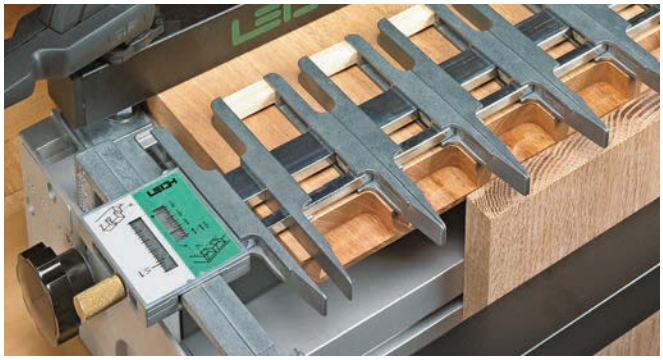

Routing Pins. To rout the pins, flip the template over and use the green thickness gauge to set the pin length. The board clamped in front is used as a gauge to position the pin board.

Troubleshooting Tips for Getting a Perfect Fit

If after routing a test set of dovetails you aren't happy with the fit, you'll need to tweak the settings on the jig and router. However, knowing just what to do can be a bit confusing. But don't worry.

In the drawings at right, you'll find a few of the most common troubles. Don't try to fix everything at once. As you make adjustments, it's best to make a small change to one setting and make another test cut. Then move on once you have that just right.

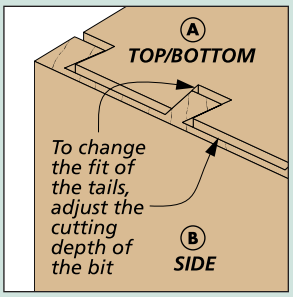

Bit Depth. If the dovetails are too loose, increase the depth of cut. If the joints are too tight, decrease the bit depth.

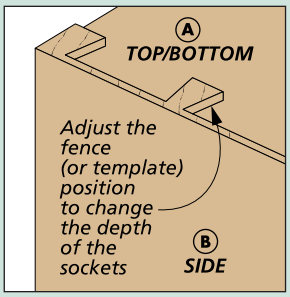

Template. If the tail board sits too deep, move the template forward. If the tails are proud, move the template back.

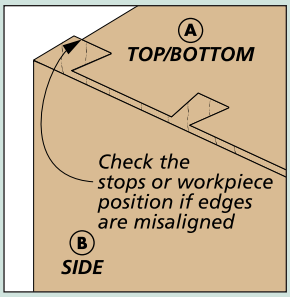

Offsets. If the edges don't align, the workpieces may not have been clamped tight against the stops on the jig.

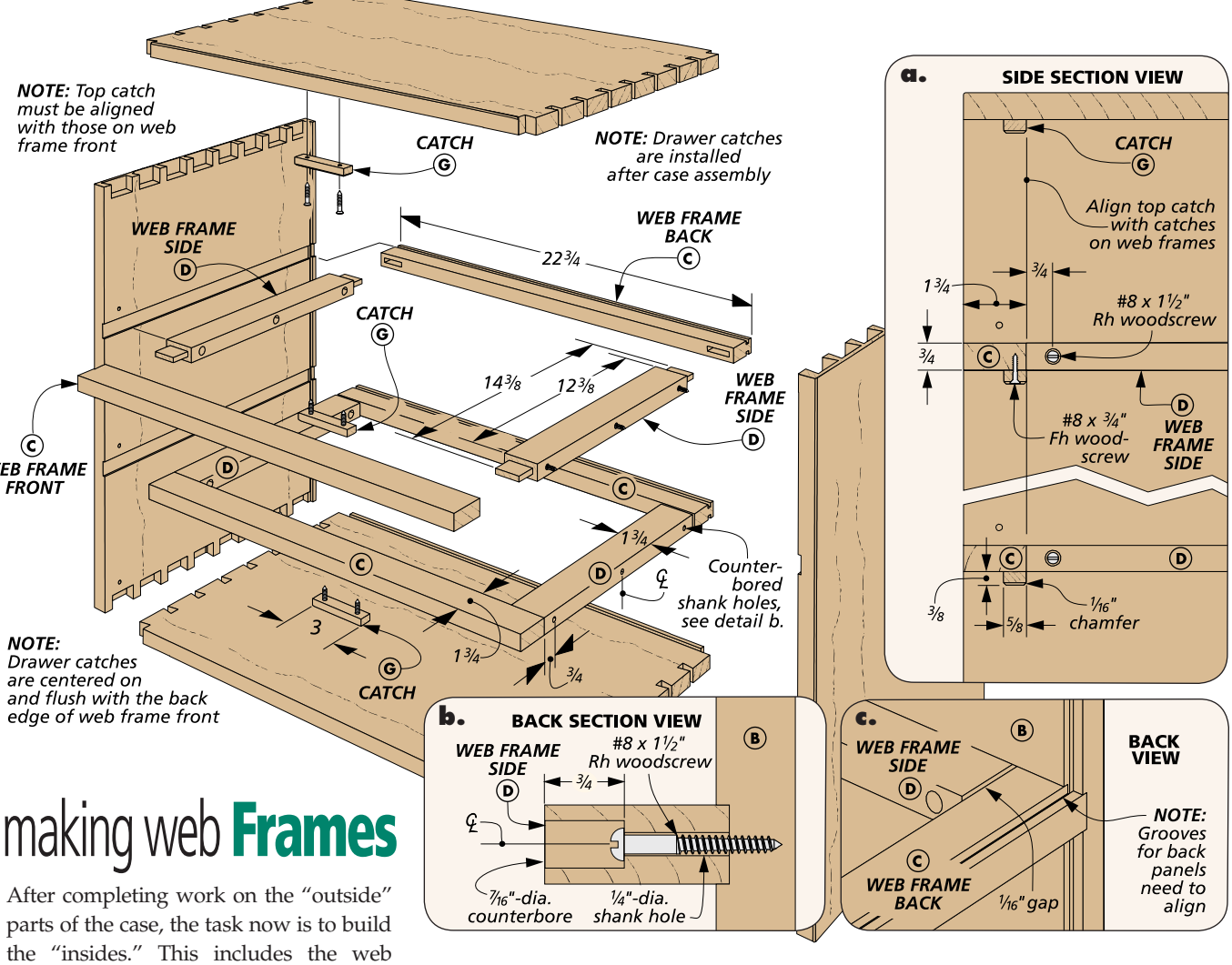

making web **Frames**

After completing work on the "outside" parts of the case, the task now is to build the "insides." This includes the web frames and the paneled back assembly.

I began with the web frames. Actually, these frames will do more than support the drawers. They will also capture the back panels. To make the frames, start by cutting the parts to size.

MORTISE & TENON JOINERY. You can see in the drawing above that the web frames are assembled with mortise and tenon joints. The box below shows you the steps involved in making the joints. I cut mortises in the fronts and backs by drilling out the waste and squaring up the mortises with a chisel.

Matching tenons are then cut on the frame sides at the table saw. I also drilled some counterbored holes in the frame sides that will be used to screw the web

How-To: Cut the Web Frame Joinery

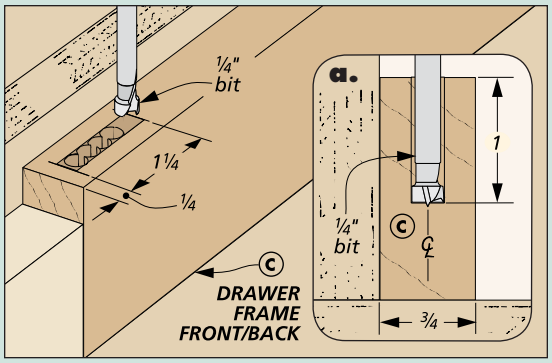

Making Mortises. Rough out the waste on the mortises at the drill press. Use a stop block to keep each one consistent. Then clean up the edges with a chisel.

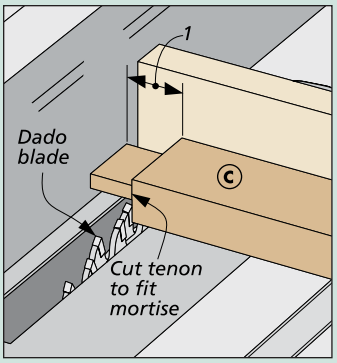

Tenons. Cut the tenons on the table saw. Start with an oversize tenon and work up to a snug fit.

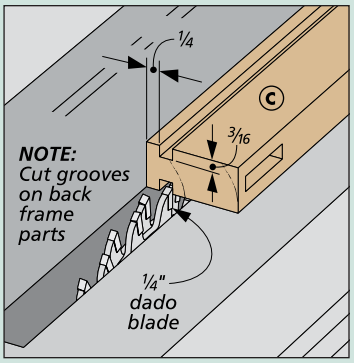

The Grooves. Before assembling the frames, cut grooves in the web frame back to hold the back panels.

frames to the case later on, as you can see in detail 'b' on the opposite page. These holes provide a strong mechanical connection to the case sides and still allow for wood movement.

GROOVES. Before assembling the frames, I cut a narrow (¼"-wide) groove in the top and bottom of both frame backs. These grooves, like the ones in the case pieces, will be used to hold the plywood back panels you'll make next.

Now you're ready to assemble the frames. I glued the frames together at the front, but not the back. Since the case is solid wood, the backs of the web frames need to float freely. This way, the grooves stay aligned with those in the case as the sides expand and contract with seasonal changes in humidity. You can see this in detail 'c' on the facing page.

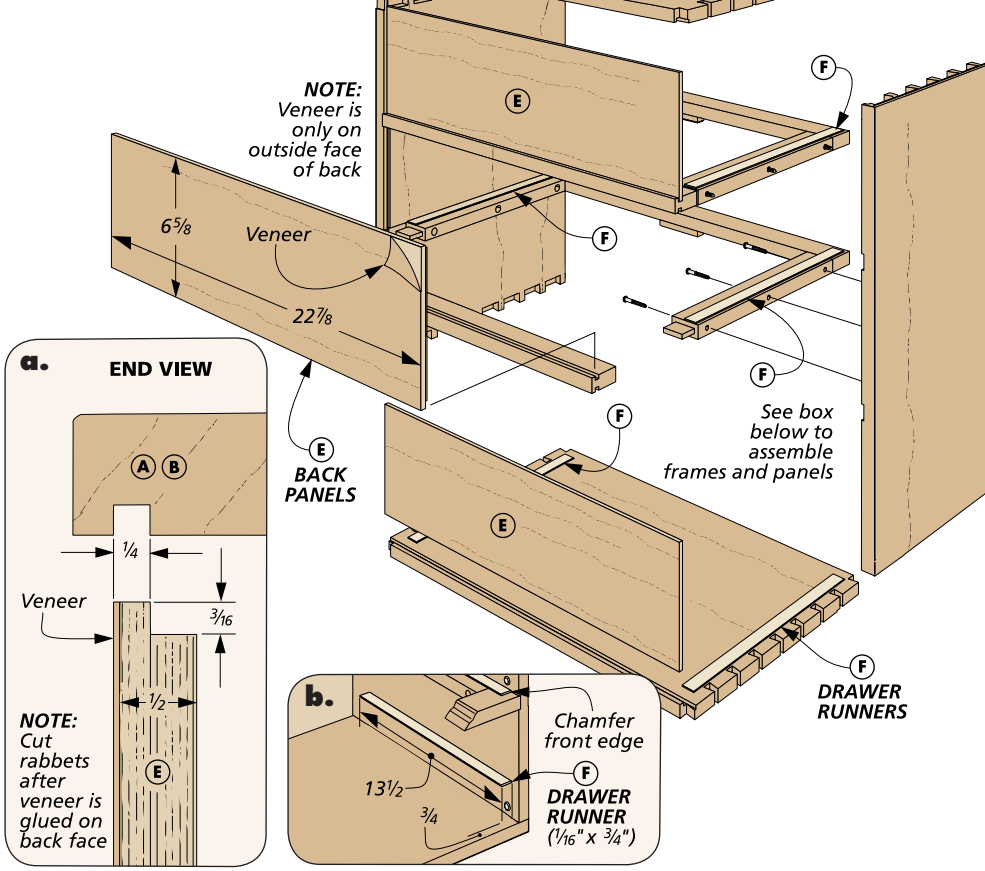

BACK PANELS

The last parts to make before you can assemble the case are the back panels. To avoid expansion and contraction issues, I made these from plywood. However, finding good-looking ½" mahogany plywood can be a challenge.

CUSTOM PLYWOOD. The solution to this problem was simple — I "made" my own, as in the drawing above. I started with oversize ½" Baltic birch plywood blanks. Then I applied a piece of straight-grained mahogany veneer to one side of each of the panel blanks. To find veneer sources, turn to page 98.

RABBET TO FIT. The next step is to cut the panels to final size and cut a rabbet on all the edges to create a tongue. The thickness of the tongue is sized to match the grooves in the case and web frames (detail 'a').

CASE ASSEMBLY. At this point, you're ready for assembly. And here, you really need to do things all at once (and in the right order). The box below shows you how I did it. Before applying any glue, however, it's a good idea to do a dry run. This way, you can make sure everything fits well and there aren't any gaps.

DRAWER RUNNERS & CATCHES. Once the case is assembled, you can attach some drawer runners to the web frames and case bottom (detail 'b' above). Finally, you can make and install the drawer catches on the case top and the underside of both web frames, as in the drawing and detail 'a' on the opposite page.

How-To: Assemble the Case

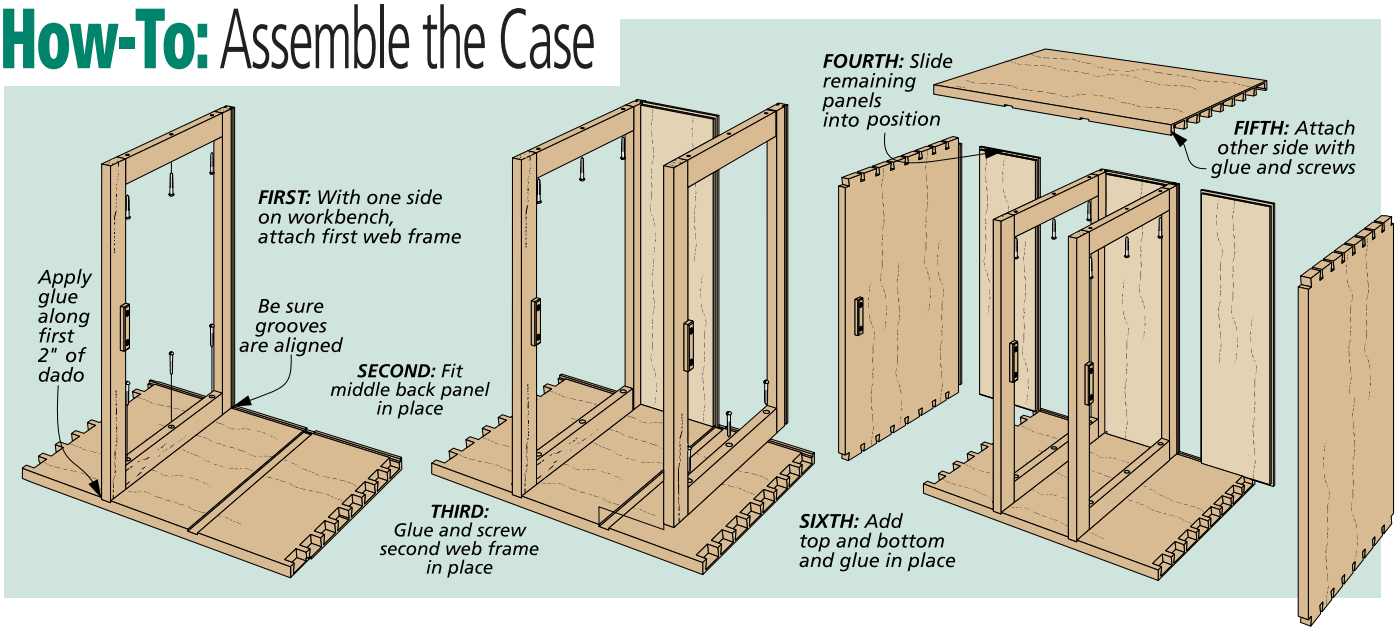

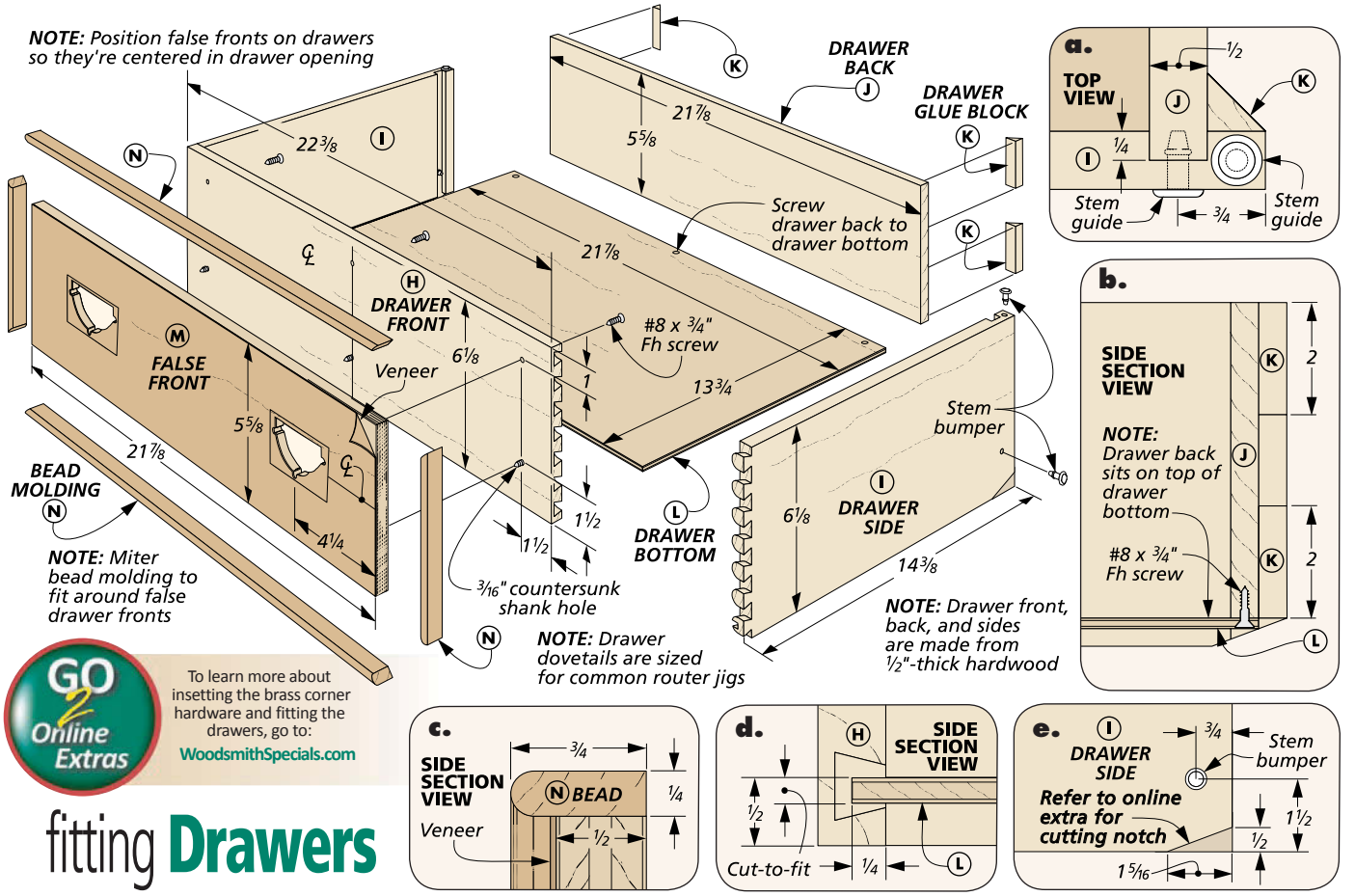

GO 2 Online Extras

To learn more about insetting the brass corner hardware and fitting the drawers, go to: WoodsmithSpecials.com

fitting **Drawers**

At this point, the case of the chest is pretty much complete. So now you can get started on the three, identical drawers that fit inside. Later, you'll add the feet and hardware.

The drawing above shows how the drawers are assembled. When sizing the parts, be aware that the back is narrower than the other parts because it rests on the drawer bottom, as in detail 'b.

DOVETAILS AT THE FRONT. As for the joinery, I used half-blind dovetails at the front because this joint will take the most stress (and is the most visible). For this joinery, you can use a standard dovetail jig.

DADOES IN BACK. The drawer back is joined to the sides with a dado, as in detail 'a.' There's one other thing I'd like to point out about the back of the drawer. I reinforced the joint at the back with some glue blocks (details 'a' and 'b').

Once the joinery is complete, there's just one thing left to do before assembling the drawer. And that's to cut a groove in the drawer front and sides to hold the bottom. Now you can glue up the drawer.

PLYWOOD BOTTOM. Since the back isn't as wide as the other parts, the plywood

How-To: Install the Drawer Pulls

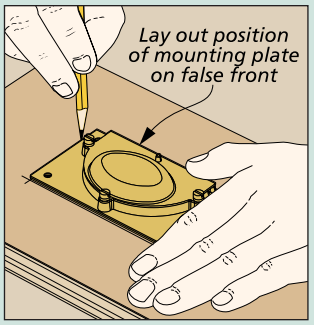

Trace the Pull. Position the pull on the false front upside down and trace its shape.

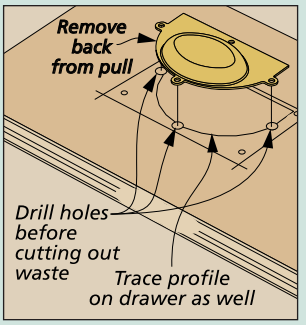

Mark the Back Plate. Remove the back plate from the pull and trace its shape as well.

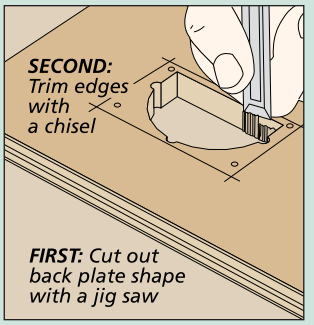

Create the Recess. Cut out the shape of the back plate. Then clean up the edges.

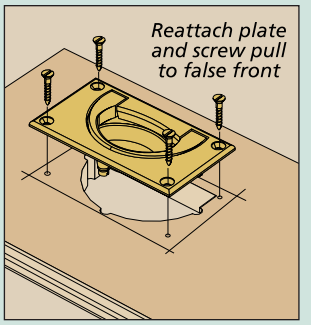

Install the Pull. Check the fit of the pull (fine-tune it with a file) and screw it in place.

drawer bottom can be slipped in place after assembly. I then screwed it to the drawer back (detail 'b' on the opposite page).

There's one final detail to take care of. I trimmed the lower back corners of the drawers to allow them to fit around the drawer catches. To see how I did this, take a look at the Online Extras.

FALSE FRONTS. With the drawer box complete, you can now make the false fronts. These are similar to the back panels in the case. The only difference is that there's a small bead molding around all four edges of the false front.

Before attaching the molding, it's a good idea to attach the drawer pulls. You can see how to do that in the box on the opposite page.

BRACKET FEET. There are only a few details left to complete the campaign chest. The first of these is to make the four identical bracket feet, as in the drawing at right.

Before cutting the feet to shape, I mitered the ends and cut a groove for a hardboard spline as in detail 'b.' Then I cut the feet to shape. After sanding them smooth, I drilled a counterbored hole that will be used to attach the feet to the case later (detail 'a' and the pattern at right).

HARDWARE. At last, you're ready to attach the hardware (drawing above). To learn how to inset the brass corners, check out the Online Extras. All that's left is to attach the feet, apply the stain, and add a finish. Then it's ready to add some stylish storage to your home.

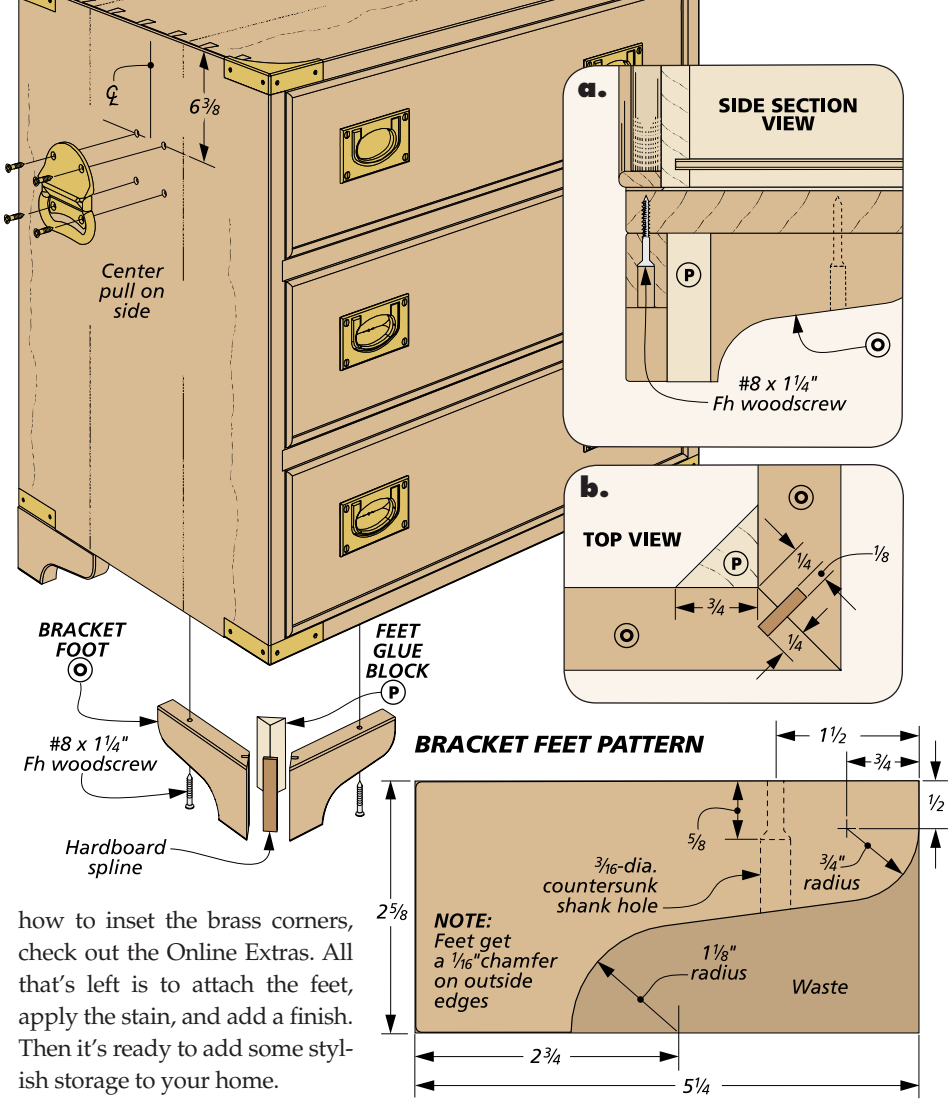

MATERIALS, SUPPLIES & CUTTING DIAGRAM

A	Top/Bottom (2)	3/4 x 16 - 23 3/4
B	Sides (2)	3/4 x 16 - 21 3/4
C	Web Frame Front/Back (4)	3/4 x 1 3/4 - 22 3/4
D	Web Frame Sides (4)	3/4 x 1 3/4 - 14 3/8
E	Back Panels (3)	1/2 ply. - 6 5/8 x 22 7/8
F	Drawer Runners (6)	1/16 x 3/4 - 13 1/2
G	Drawer Catches (3)	3/8 x 5/8 - 3
H	Drawer Fronts (3)	1/2 x 6 1/8 - 22 3/8
I	Drawer Sides (6)	1/2 x 6 1/8 - 14 3/8
J	Drawer Backs (3)	1/2 x 5 5/8 - 21 7/8
K	Drawer Glue Blocks (12)	1/2 x 1/2 - 2
L	Drawer Bottoms (3)	1/4 ply. - 13 3/4 x 21 7/8
M	False Fronts (3)	1/2 ply. - 5 5/8 x 21 7/8
N	Bead Molding	1/4 x 3/4 - 192 rgh.
O	Bracket Feet (8)	3/4 x 2 5/8 - 5 1/4
P	Feet Glue Blocks (4)	3/4 x 3/4 - 2 5/8

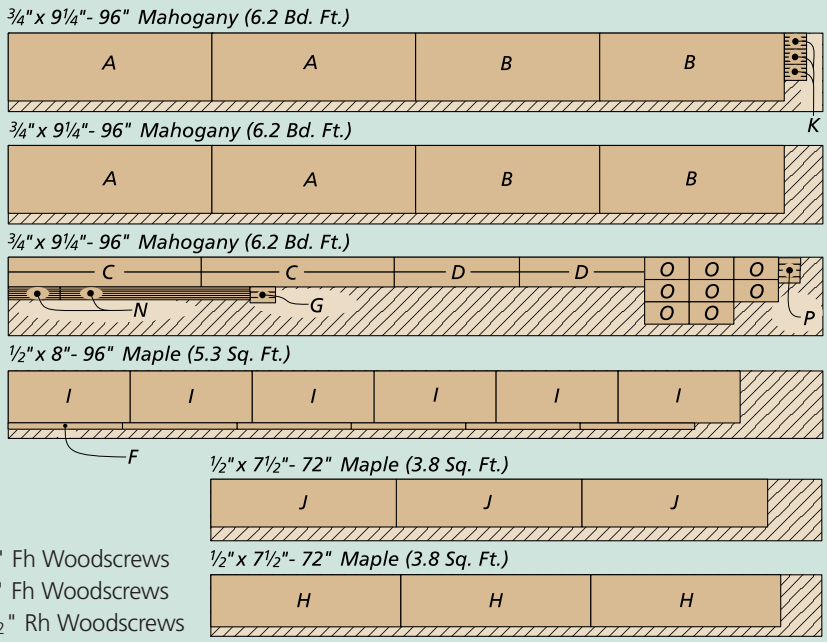

- (8) Heavy-Duty Chest Corners w/Screws
- (6) Drawer Handles w/Screws
- (2) Chest Handles w/Screws
- (18) Nylon Stem Bumpers
- (33) #8 x 3/4" Fh Woodscrews
- (8) #8 x 1 1/4" Fh Woodscrews
- (12) #8 x 1 1/2" Rh Woodscrews
- (3) 6" x 48" Mahogany Veneer

ALSO NEEDED: One - 48" x 48" sheet 1/4" Maple plywood
One - 30" x 60" sheet 1/2" Baltic birch plywood

Kitchen Table. Our two-tone kitchen table is the perfect size for most "eat-in" kitchens. Its sturdy enough to withstand the rigors of everyday use, as well as the occassional family game night.

GO 2 Online Extras

For information on the finishes used on the farmhouse tables go to: WoodsmithSpecials.com

Sofa Table. This sofa table design will look right at home with almost any decor. Its narrow footprint keeps it out of the way.

Custom Farmhouse Tables

By learning just one master technique, you'll be able to choose from three separate table designs to suit the ever-changing needs of your home.

I've always enjoyed designing and building tables. With just a little effort you can come up with a table that's not only functional but attractive. And the choices can be endless. That's what helps make this three-table lineup so interesting.

All three of the tables share the same style of knock-down base. You just start with the nicely detailed, purchased legs and the rest is a snap. The technique here is so straightforward, don't be surprised if your base is assembled in a day. But you might want to slow things down a little and include a drawer. It's really only a little more work and it gives you the chance to customize a bit.

Finally, you can add a top to make each table unique. The plank and cleat top on the sofa table above is about as easy to build as they come. And while the thick pine top on the kitchen table above left is pretty standard, it looks right at home. The breadboard-end top on the oak dining table gives you some different challenges and a classic look. But I'm guessing you'll only have one difficulty with these tables, deciding which one to build.

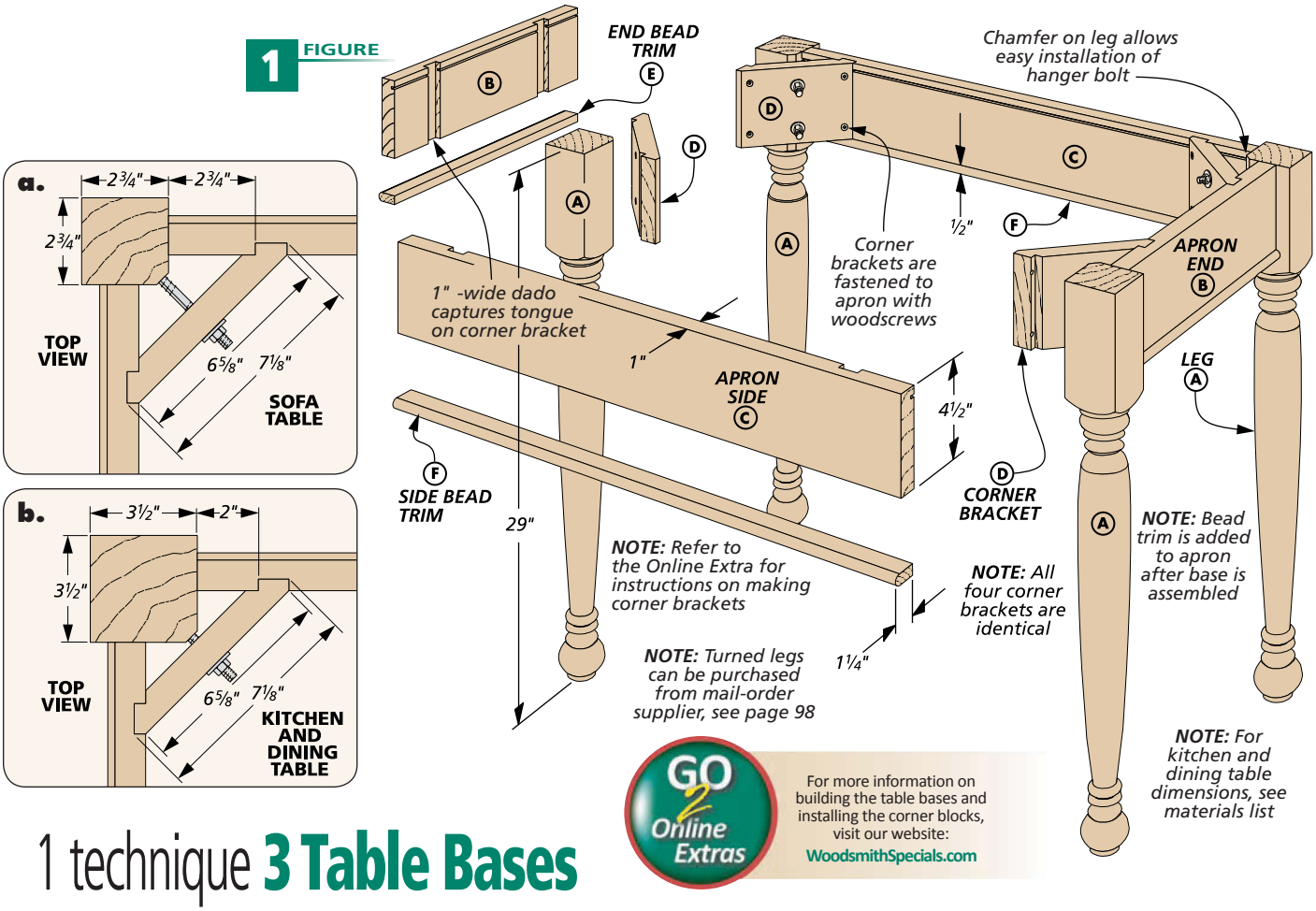

1 technique 3 Table Bases

One of the nicest things about the knockdown technique I used for these tables is that the process is so easy. And it can be used on just about any size or style of table. And as you can see from the photos on pages 24 and 25, the results can't be beat.

The three tables that I built using the knockdown technique have bases that are all pretty much identical in style. I just varied the sizes of the bases (and legs) and then I added a detail or two for interest. Before you get started on one of the tables, you'll want to read over the Online Extra article. This will give you all the basics on the knockdown technique, so I won't get into the construction details of each base. I'll just try to point out some of the differences and the finer points.

THE BASE. Fig. 1 shows the breakdown of the base for the maple sofa table. All three of the bases follow this same design. Only the dimensions and one minor, but important, detail are different.

DADO POSITION. If you take a close look at Figs. 1a and 1b, you'll see that the position of the dadoes in the aprons is different. The reason is simple. I used nice, purchased legs for all three tables. They weren't expensive and they look great. (For information on buying the legs, see sources on page 98.)

But in order to keep the legs in scale with the table, I used smaller legs for the sofa table. (The sofa table legs are 2¾" square while the legs for the dining and the kitchen table are 3½" square.) Rather than change the size of the corner brackets for the sofa table, it made more sense to just reposition the dadoes in the aprons.

The dadoes that hold the corner brackets are 1" wide (Fig. 2a). This means you'll have to make a couple of passes with a

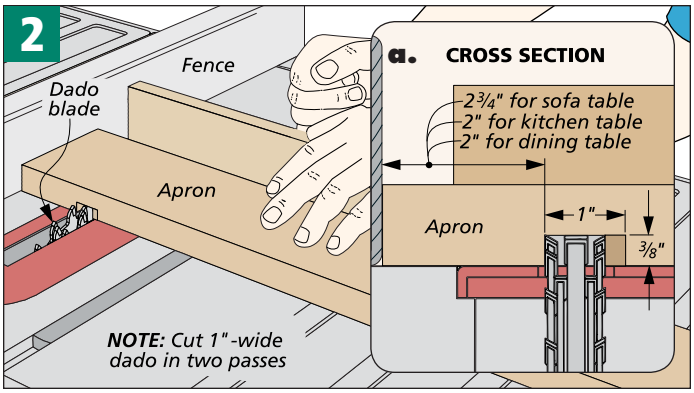

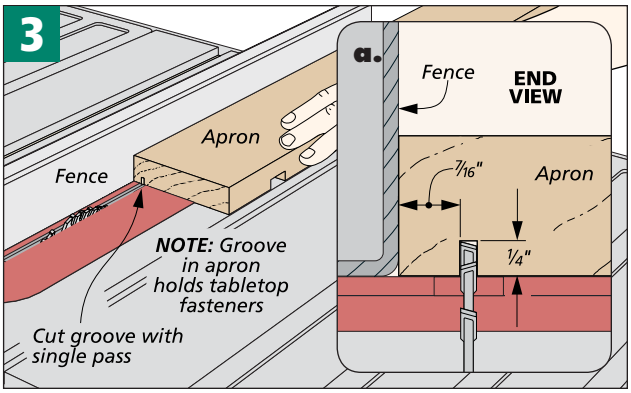

dado blade to get the full width. You can set the fence for the first pass as shown in Fig. 2. And after each apron piece is cut with this setting, just reposition the fence to end up with a 1"-wide dado.

FASTENER GROOVE. When the time came to fasten the top to the frame, I wanted it to be quick and easy. To prepare for that, I cut a groove around the top, inside edges of the apron pieces (Figs. 3 and 3a) that will hold metal tabletop fasteners.

WOODSCREWS & ANCHOR BOLTS. After you've made the corner blocks, you're ready to put it all together (Fig. 4). About the only tools you'll need for the assembly are a drill, a screwdriver, and a wrench. The article at *WoodsmithSpecials.com* gives you a play by play on this. And you'll find some tips on installing anchor bolts there, as well. It's a nice sight when you tighten the nuts on the anchor bolts and the legs and the apron close up tightly.

ADD A BEAD. I thought the apron needed just a little detail and a simple way to accomplish this was to add ½" bead molding around the bottom edge (Figs. 4 and 4a). You can make the bead molding with a ¼" round-over bit in the router table. Then it's just a matter of cutting the pieces to fit snug between the legs and gluing them in place.

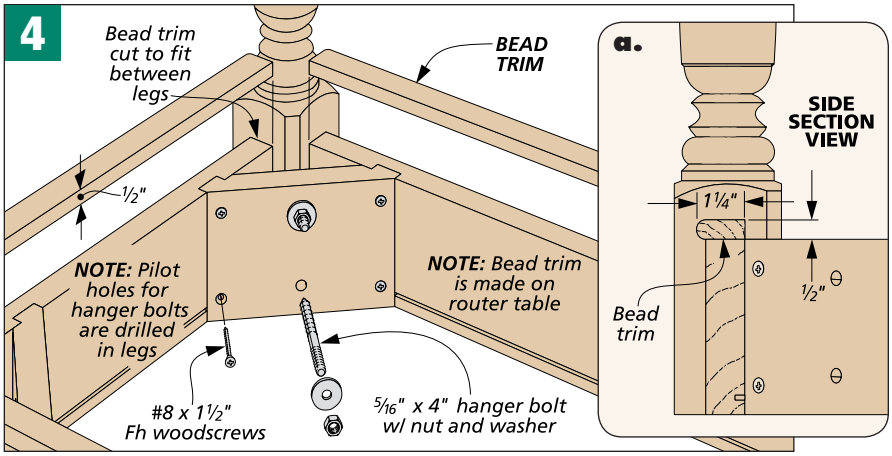

MATERIALS, SUPPLIES & CUTTING DIAGRAM

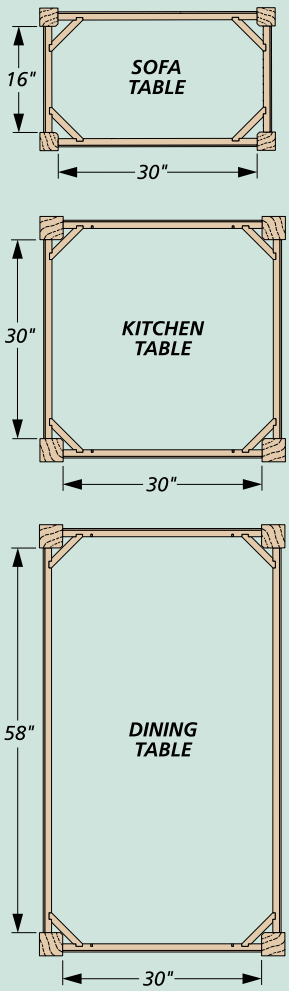

Sofa Table Base

A	Legs (4)	2¾ x 2¾ - 29	**E**	End Bead Trim (2)	½ x 1¼ - 16
B	Apron Ends (2)	1 x 4½ - 16	**F**	Side Bead Trim (2)	½ x 1¼ - 30
C	Apron Sides (2)	1 x 4½ - 30	•	(16) #8 x 1½" Fh Woodscrews	
D	Corner Brackets (4)	1 x 4½ - 7⅛	•	(8) 5/16" x 4" Hanger Bolts w/Nuts & Washers	

1" x 6½" - 96" Maple (5.4 Bd. Ft.)

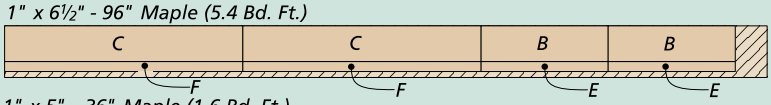

1" x 5" - 36" Maple (1.6 Bd. Ft.)

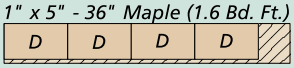

Kitchen Table Base

A	Legs (4)	3½ x 3½ - 29	**E**	End Bead Trim (2)	½ x 1¼ - 30
B	Apron Ends (2)	1 x 4½ - 30	**F**	Side Bead Trim (2)	½ x 1¼ - 30
C	Apron Sides (2)	1 x 4½ - 30	•	(16) #8 x 1½" Fh Woodscrews	
D	Corner Brackets (4)	1 x 4½ - 7⅛	•	(8) 5/16" x 4" Hanger Bolts w/Nuts & Washers	

1" x 6½" - 96" Pine (5.4 Bd. Ft.)

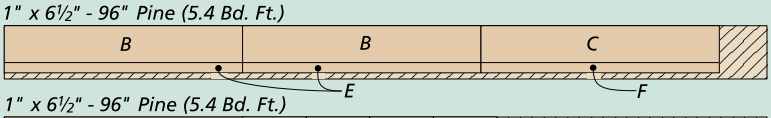

1" x 6½" - 96" Pine (5.4 Bd. Ft.)

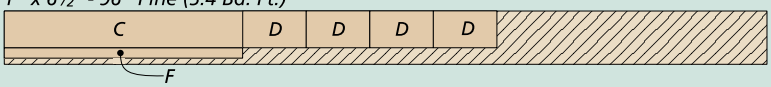

Dining Table Base

A	Legs (4)	3½ x 3½ - 29	**E**	End Bead Trim (2)	½ x 1¼ - 30
B	Apron Ends (2)	1 x 4½ - 30	**F**	Side Bead Trim (2)	½ x 1¼ - 58
C	Apron Sides (2)	1 x 4½ - 58	•	(16) #8 x 1½" Fh Woodscrews	
D	Corner Brackets (4)	1 x 4½ - 7⅛	•	(8) 5/16" x 4" Hanger Bolts w/Nuts & Washers	

1" x 6½" - 96" Red Oak (Two boards @ 5.4 Bd. Ft. each)

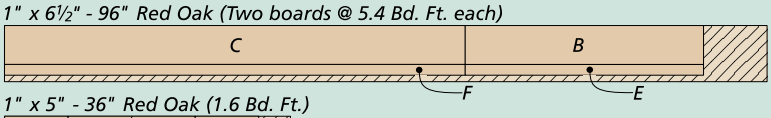

1" x 5" - 36" Red Oak (1.6 Bd. Ft.)

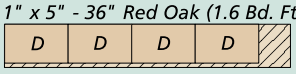

add a **Drawer**

Details. A nice, deep drawer is a great addition to this old-style, pine kitchen table.

GO 2 Online Extras

For more on how to make locking rabbets using one router bit visit us at: WoodsmithSpecials.com

How do you make a great looking table a little more practical? Just add a drawer. For this kitchen table (or the oak dining table) it's a natural. It's an easy way to make good use of some otherwise wasted space. The work is really pretty straightforward and when you're done, I think you'll be glad you tackled it.

THREE EASY STEPS

A simple way to look at the process of adding a drawer is to break it down into three steps. First, before the base is assembled, you modify the apron to create a drawer opening. Then once the base is assembled, the guide rail assemblies are added to the base. And finally, the drawer can be put together and fit into its opening.

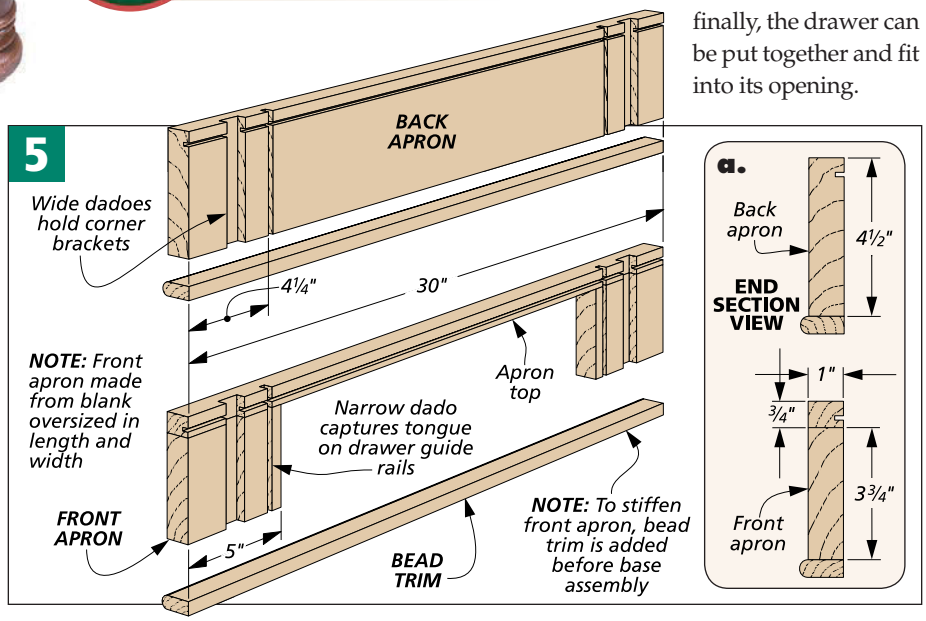

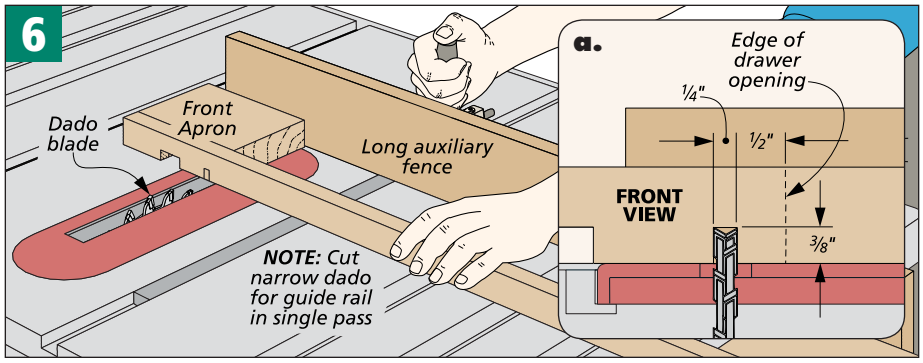

THE APRON. I wanted to add a drawer, but didn't want it to break up the clean lines of the table apron. So I made a couple of design decisions. First, the drawer front is flush with the apron. And then second, I cut the drawer front and the apron ends from a single piece of wood. With a flush front and perfect grain match, the drawer blends right in.

To create the drawer opening, you'll want to start with a slightly oversized blank (¼" extra in length and width). First, rip a ¾"-wide apron top from one edge. Then cut this piece to the final apron length. Now size the two apron ends and the drawer front (D) from the remaining piece (in sequence) of the blank (Figs. 5 and 8). When you glue the apron ends to the apron top, you'll have a perfectly-sized opening.

Next, you can take all the apron pieces back to the table saw to cut the dadoes for the joinery. You'll notice in Fig. 5 that both the front and the back aprons have a second set of narrow dadoes. These will hold the drawer guide rail assemblies. A long auxiliary fence will help you make these cuts in the front apron piece (Figs. 6 and 6a).

After the dadoes are cut, you can go ahead and add the decorative bead to the bottom edge of the apron pieces (Fig. 5a). The bead is needed to stiffen the front apron during assembly and act as a lower stop when the guide rails are added.

ADD SUPPORT RAILS. Once the base is assembled, the guide rail assemblies come next. A look at Fig. 7 shows how these three-piece assemblies are installed. Each one is just a ¾"-thick guide rail capped with a top and bottom runner.

I started by cutting the guide rails (A) to size and then creating a tongue on each end to fit the narrow dadoes in the apron pieces (Fig. 7a). When the guide rails are ready to install, they simply slide in from above. A little glue and the bead molding will hold them in place.

Next comes the two drawer runners. The bottom runner (B) is slightly thicker (9/16") than the top runner (C) and has a 1/16" rabbet that fits over the guide rail (Fig 7b). This allows the drawer to sit above the decorative apron bead and will save some wear and tear on the apron. After the runners are screwed

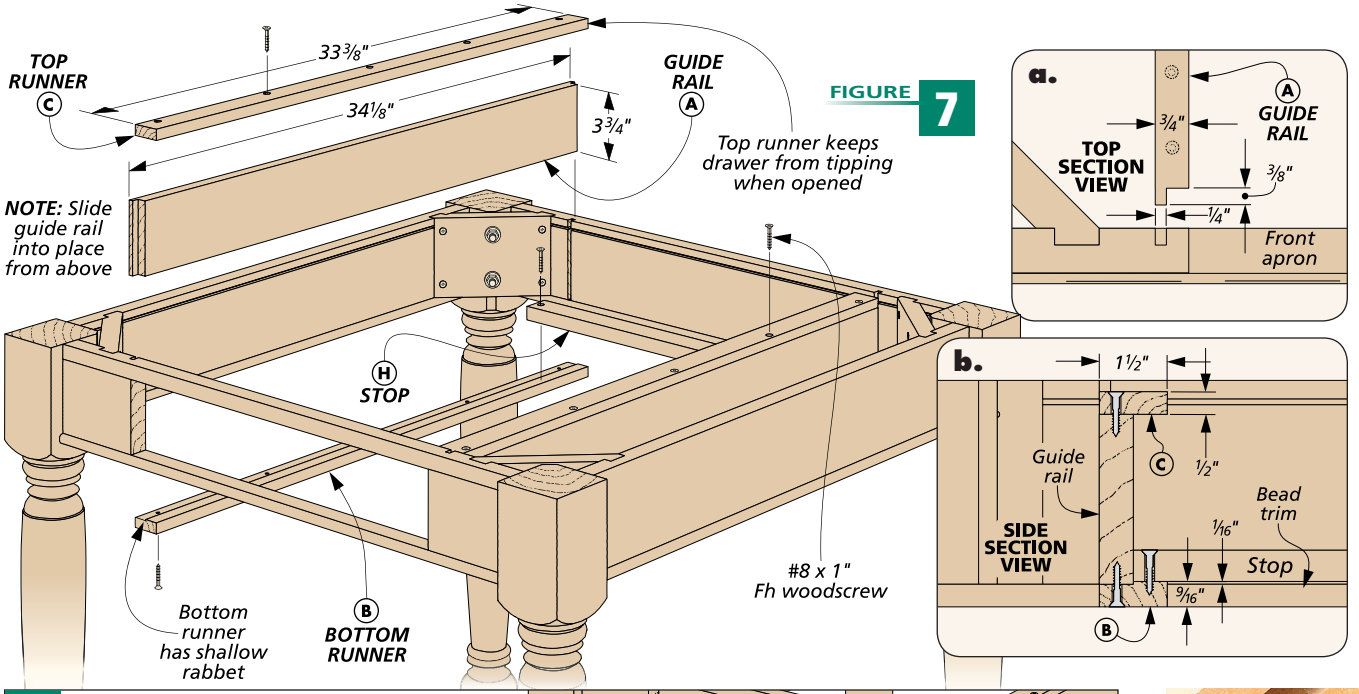

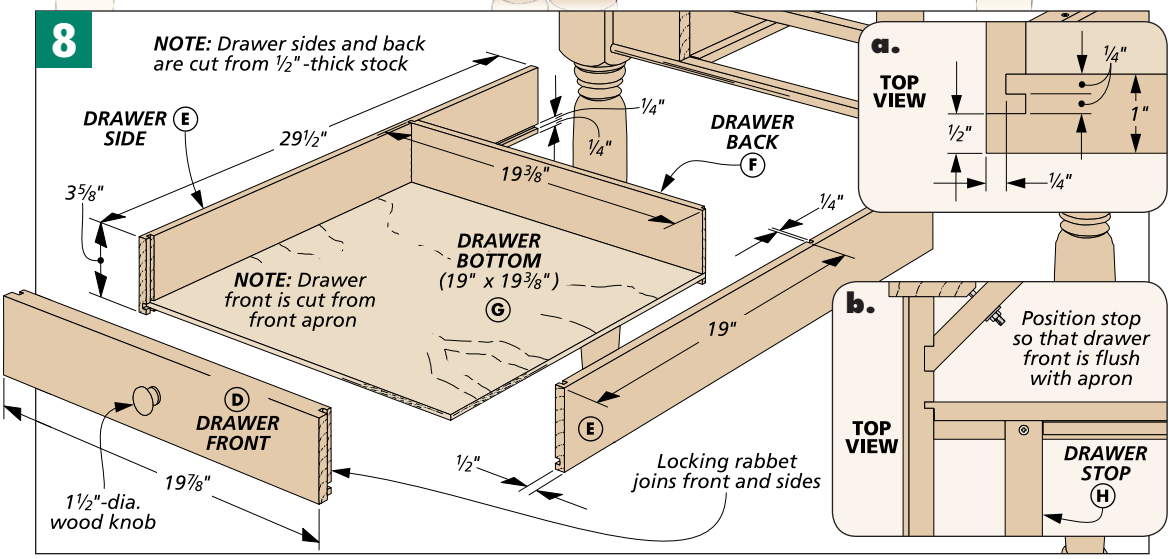

Precision. Learn a new way to cut a locking rabbet joint online.

and glued to the guide rails, you're ready to build a drawer.

BUILD A DRAWER. As you can see in Fig. 8, this drawer is a little unusual. The sides of the drawer extend far beyond the back. This is a handy trick that allows you to easily get at stuff buried at the back of the drawer without risk of it falling out.

The drawer joinery is pretty standard. A locking rabbet (Fig. 8a) joins the drawer front (D) and the drawer sides (E). A tongue and dado joins the drawer back (F) to the sides (Fig. 8). The ¼" plywood drawer bottom (G) fits in a groove.

After the drawer was assembled, I added a 1¼" wood knob. Finally, position a drawer stop (H) across the guide rails as shown in Fig. 8b.

MATERIALS, SUPPLIES & CUTTING DIAGRAM

A	Guide Rails (2)	3/4 x 3 3/4 - 34 1/8
B	Bottom Runners (2)	9/19 x 1 1/2 - 33 3/8
C	Top Runners (2)	1/2 x 1 1/2 - 33 3/8
D	Drawer Front (1)	1 x 3 5/8 - 19 7/8
E	Drawer Sides (2)	1/2 x 3 5/8 - 29 1/2
F	Drawer Back (1)	1/2 x 3 5/8 - 19 3/8
G	Drawer Bottom (1)	1/4 ply. - 19 x 19 3/8
H	Drawer Stop (1)	3/4 x 1 1/2 - 20

- (22) #8 x 1" Fh Woodscrews
- (1) 1 1/4"-dia. Wood Knob w/Screw

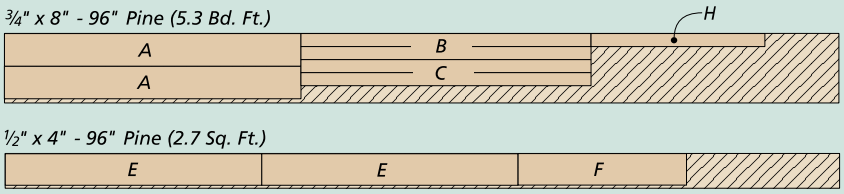

NOTE: Drawer front (D) is cut from apron piece

ALSO NEEDED: 1/4" plywood for drawer bottom

Plank & Cleat Top. A simple plank and cleat top creates an age-old look that'll last for generations.

3 classic **Tabletops**

One of the most noticeable parts of a table is, of course, the top. An easy way to give a table its own interesting look is with a top that's a bit unique. So for each table base, I tried a little different approach to the top.

For the maple sofa table I tried something "old" — a top made from individual boards fastened together with cleats and woodscrews. It's a great style and it's easy to build.

A kitchen table needs a large, functional (and easily cleaned) surface that will hold up to some heavy use. A top glued up from thick stock involves a little bit of work but will look great on this classic table and stand the test of time.

The breadboard-end top on the dining table has a more elegant look. You might think it would be a challenge. But don't worry, with a plywood center panel and simple joinery, it goes together easily.

PLANK & CLEAT TOP

I would wager a guess that most of the earliest tabletops were made with plank and cleat construction. And that's one reason why I chose this technique for the maple sofa table. I wanted to give this table an old "tavern" look. And I should also mention that this type of top is really appealing from a building standpoint. It really doesn't require a lot of exacting work. So making this style of tabletop look good is an easy job.

THREE PLANKS. A glance at Fig. 9 shows how this top goes together. You can keep the glue bottle on the shelf. All you have here are three wide planks fastened together with a couple of cleats and woodscrews.

The first task is to cut the three planks (A) to size. Why three planks and not two or four? Well, traditionally wide boards were used for this type of top. It only made sense — the wider the boards the fewer the number needed and the fewer the spaces between them. So I used wide stock and the two "joint lines" give the top just the right look.

SAND & EASE THE EDGES. Once the planks are ready, you can pick up some sandpaper. Since the planks are pre-cut to size and won't be glued together you can do a lot of the sanding before assembly. I made sure to knock off all the sharp edges and corners of each plank. I wanted the look of three individual boards, not one smooth top.

ATTACH THE CLEATS. With the planks prepared, they can be connected to make a top. The two cleats (B) can be cut to size from ¾" stock and then the countersunk shank holes are predrilled (Figs. 9 and 9a). Now just carefully line up the planks (you might want to tighten a clamp across them) and position the cleats (Fig. 9a). Use the predrilled shankholes to drill some pilot holes in the planks and add the woodscrews. Don't be tempted to glue the planks to the cleats, they need to be able to move with changes in the humidity.

FASTEN IT TO THE BASE. That's the long and short of it. Finally, I used a handful of metal tabletop fasteners to hold the top to the base (Fig. 9b).

A GLUED SLAB TOP

The base that I built for the pine kitchen table has a solid, old farmhouse feel to it. So it needed a top to match. The choice was pretty obvious. A solid top, glued up out of thick, pine stock (1"), would look right at home on this frame.

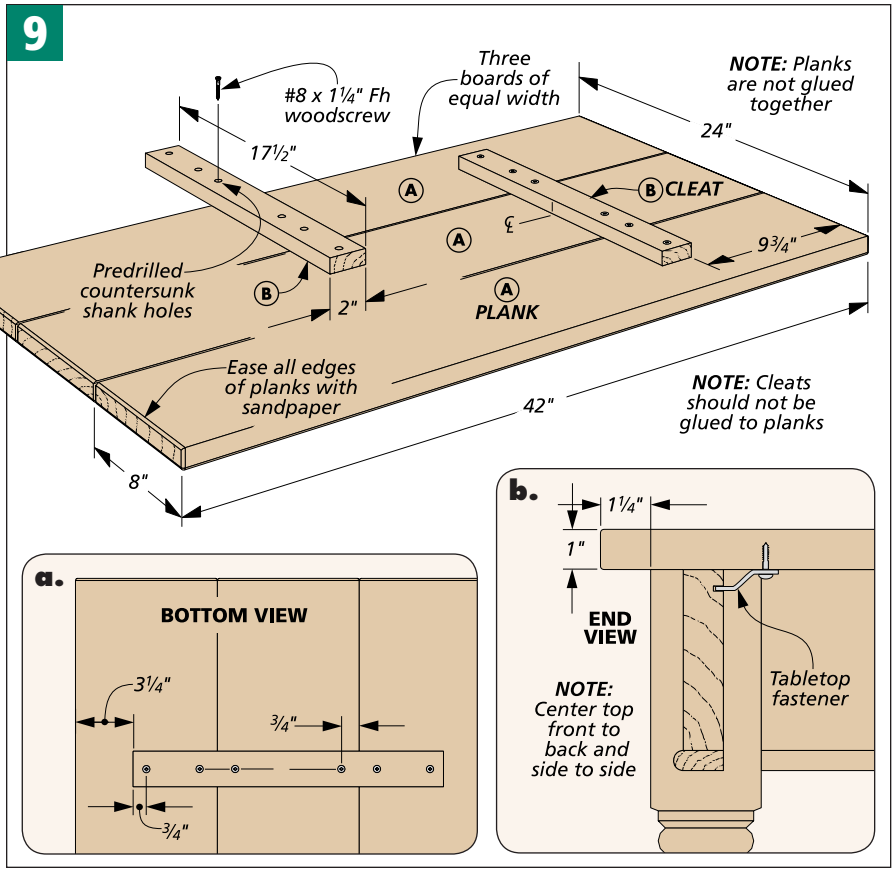

A WIDE GLUEUP IN THREE PARTS. The top that I built for this table was 44" square. Honestly, it's one of the widest glueups I've ever had to do. So to do a good job of it, I used a couple of simple tricks. Fig. 10 shows the first. I cut all the boards needed to rough length and then glued them into three narrower panels. Smaller glueups are a lot easier to handle and the process is a bit more relaxed. You only have one or two joints at a time to worry about fitting and lining up.

Once the individual sections are ready, you can complete the job by gluing them together. But keeping a large panel flat during this process takes a little doing. Fig. 11 shows a simple solution. A couple of long, wide cauls clamped across the ends of the glueup will keep it perfectly flat while the glue dries.

TRIM THE TOP. I was pleased with how my rough top turned out. After a short spell with the belt sander, it was ready to be trimmed to size. But not many table saws will accommodate a panel this size, so I resorted to a circular saw with a shop-made guide for this job. You can find more on this by checking the Online Extras.

THE IMPORTANT DETAILS. Once the top is cut to size, the hard part is behind you. All you have left are a couple of simple but important tasks. A kitchen table is certainly going to get a lot of use and abuse so any sharp edges and corners wouldn't hold up for long. You can easily solve this problem and add a couple of nice details at the same time.

First, I picked up a jigsaw and cut a 1" radius on all four corners of the top (Fig. 10a). And then after they were sanded smooth, I used a hand-held router to add a profile to both the upper and lower edges of the top. The lower edge can simply be eased with ⅛" roundover. The upper edge gets a classic, ogee profile as shown in Fig. 12a.

Attaching the top is the last step. You should have an even overhang on all four sides of the base (Fig. 10b). And if you work with the table upside down, attaching the tabletop fasteners goes a lot smoother.

Slab Top. This top, glued up from thick pine, is the perfect match for the solid kitchen table base.

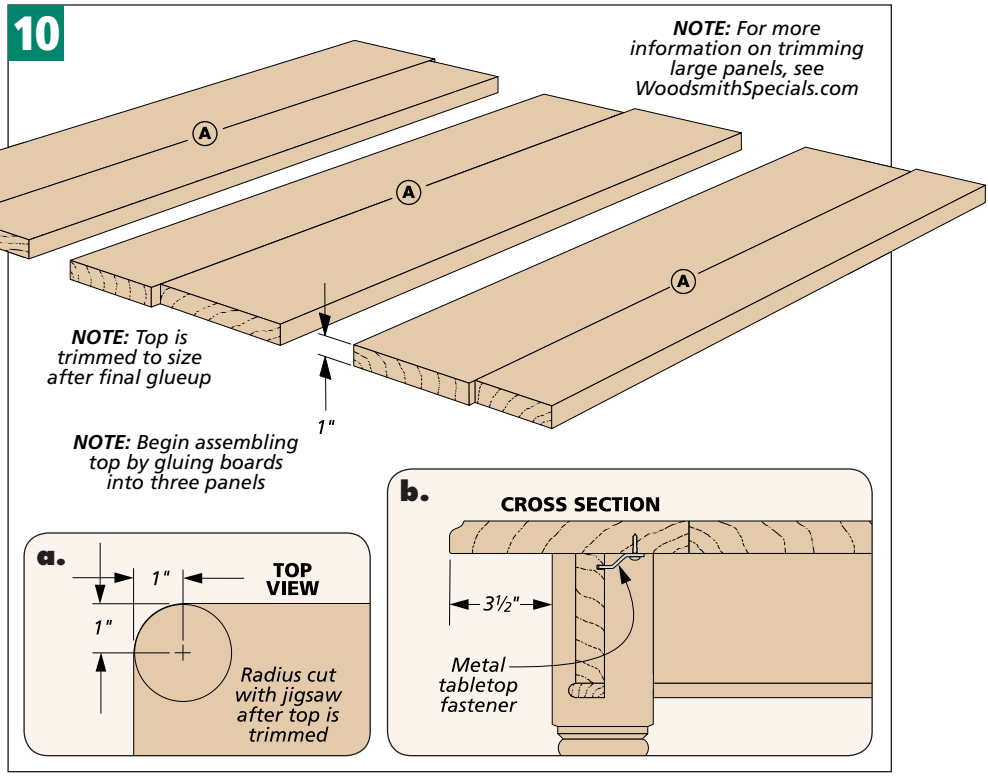

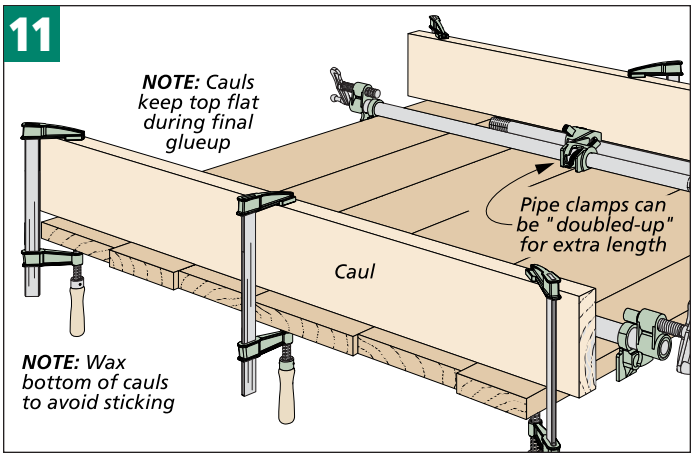

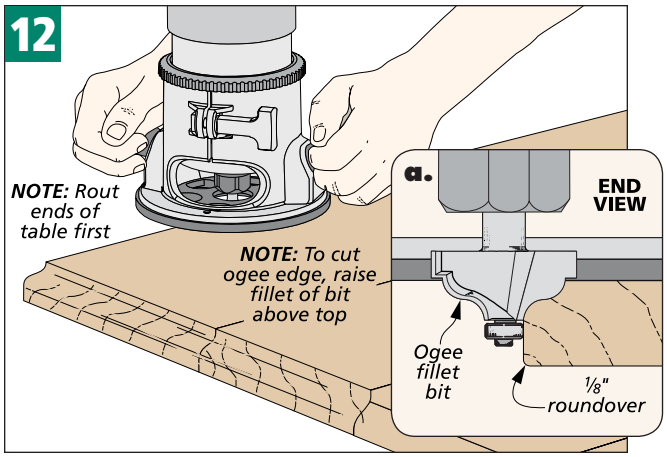

Breadboard Top. Breadboard ends are a great way to add distinction.

BREADBOARD-END TOP

A large dining table needs a top with a little bit of style. Something just a bit more formal, and with a little more detail than a table designed for everyday use. But to match the simple look of the base for the oak dining table you don't want to get carried away. I think the breadboard-end top in the photo above hits the nail on the head in all the right ways.

Breadboard end construction has been used on tabletops for a long time, so it fits right in with the traditional look of the table base. A breadboard end refers to the stout piece fixed across the end of the top (it was commonly used on breadboards). The idea was that a breadboard end would help keep a wide tabletop flat over time. To me, it not only serves this practical purpose but it also gives an otherwise large, flat surface a more interesting look.

HOW TO BUILD IT. The top needed for the dining table is pretty large so I ruled out solid wood. A glueup of this size would be too difficult. A top made from a nice piece of straight-grained ¾" oak plywood made a lot more sense.

When you use straight-grain plywood for the center panel of the top, you eliminate a lot of the hard work and add quality at the same time. You'll have a consistent color and grain pattern and attaching the breadboard ends "cross grain" won't cause a problem.

When you take a look at Fig. 13, you can see how the top is put together. You have a center panel that's trimmed on the long sides and "capped" on both ends. Some filler pieces beneath the center panel beef-up the thickness.

THE CENTER PANEL. The first thing to do is to cut the ¾" plywood center panel (A) to size. You want crisp, square edges so the trim pieces and breadboard ends will fit well.

SIDE TRIM. Now you can start hiding the edges of the plywood. Fig. 13a shows how I added a couple of rabbeted side trim (B) pieces. The rabbet wraps around the edge of the table and provides more glue surface. But then only a narrow band of wood will show from above.

ADD THE FILLERS. Once the side trim is added, you can cut the plywood side fillers (C)

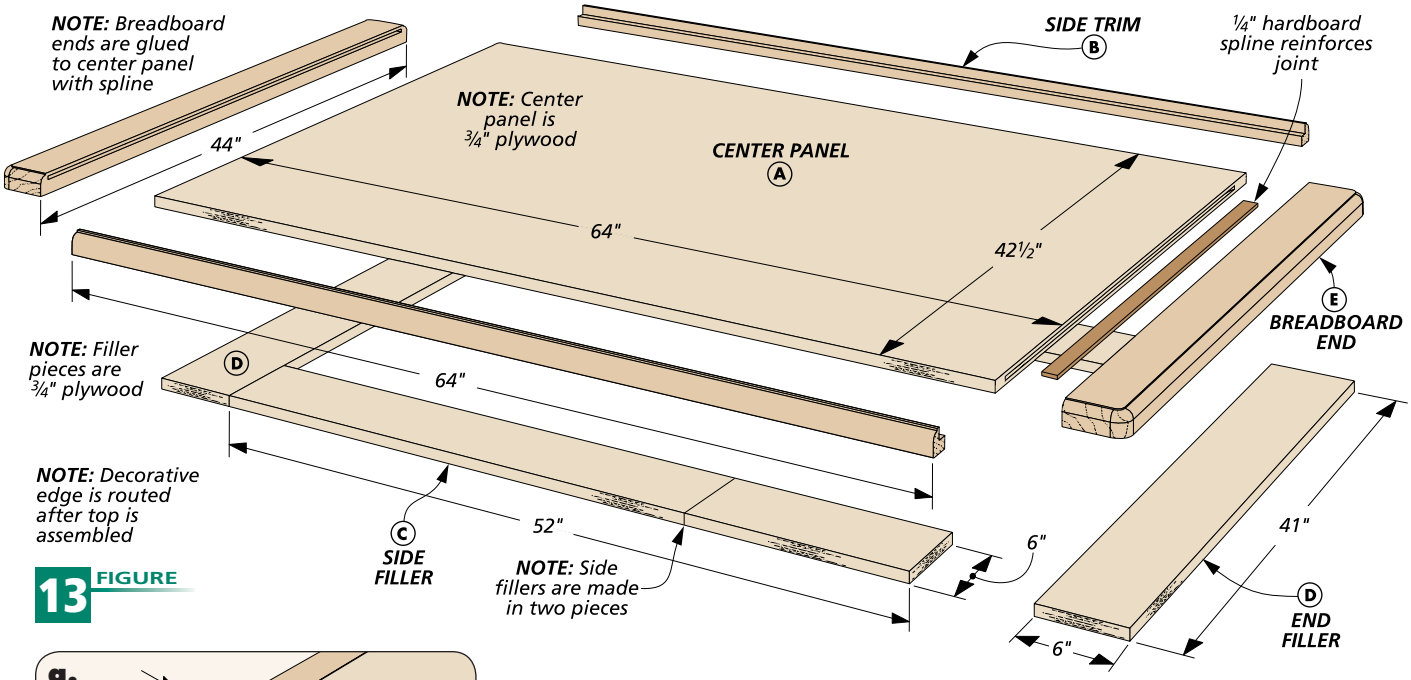

13 FIGURE

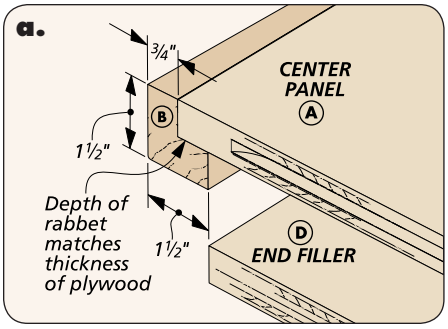

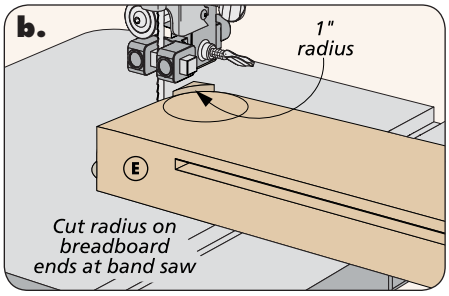

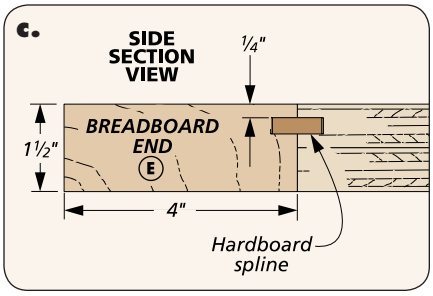

and end fillers (D) to size and glue them in place. Just snug the side fillers up to the side trim and then add the end fillers flush to the ends of the center panel.

ADD THE ENDS. Now the top is ready for its breadboard end pieces. After you've cut the two breadboard ends (E) to size, there's some simple joinery to work on. Fig. 13c at the bottom of the previous page shows how I fit a "blind" hardboard spline across this joint to add strength.

A ¼" slot cutter in a hand-held router makes cutting the stopped groove for the splines easy. You can check the Online Extras for a clever way to cut the slots in the breadboard ends. And Figs. 14 and 14a show the details for the plywood center panel.

SOME NICE DETAIL. Before I glued the breadboard ends in place, I cut a radius on the outside corners (Fig. 13b). And the final detail is a ½" roundover with a shoulder, as shown in Figs. 15 and 15a. The completed top can then be attached and the table is ready for a finish.

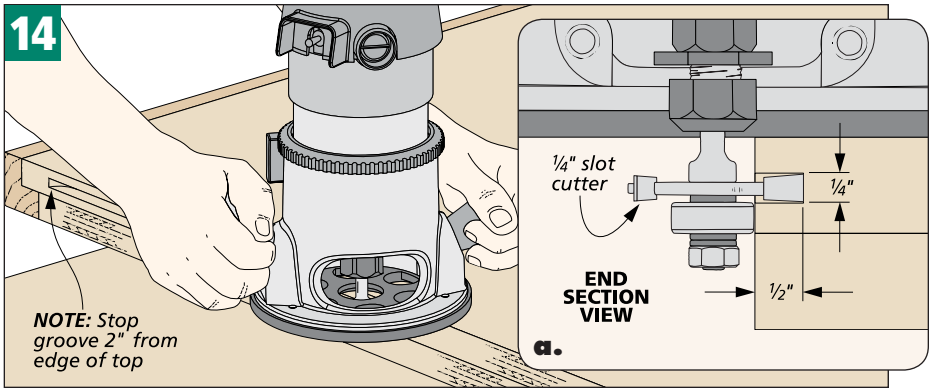

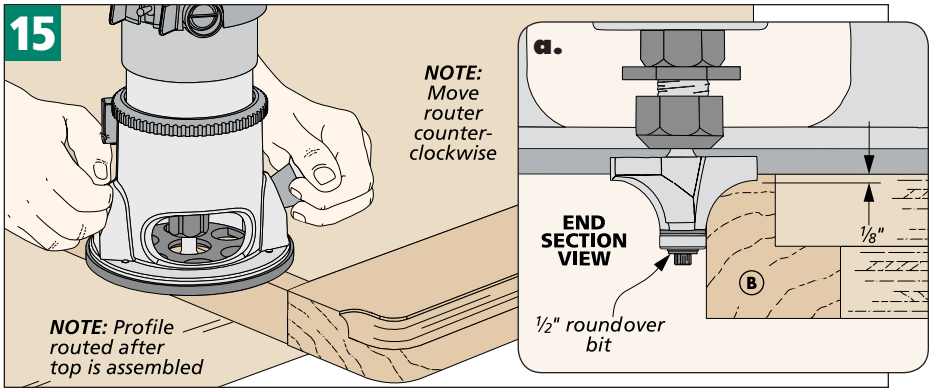

MATERIALS, SUPPLIES & CUTTING DIAGRAM

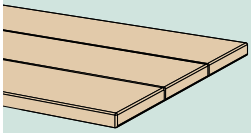

Plank and Cleat Top

A	Planks (3)	1 x 8 - 42
B	Cleats (2)	¾ x 2 - 17½

- 6) Metal Tabletop Fasteners w/Screws
- (12) #8 x 1¼" Fh Woodscrews

1" x 8½" - 96" Maple (7.1 Bd. Ft.)

1" x 8½" - 96" Maple (7.1 Bd. Ft.)

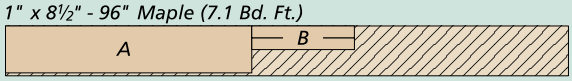

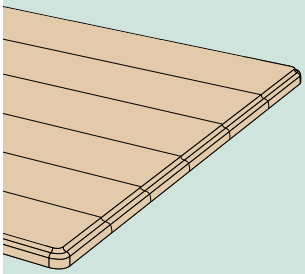

Glued Slab Top

A	Top (1)	1 x 44 - 44

- (8) Metal Tabletop Fasteners w/Screws

1" x 8½" - 96" Pine (Three Boards @ 7.1 Bd. Ft. each)

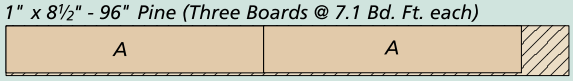

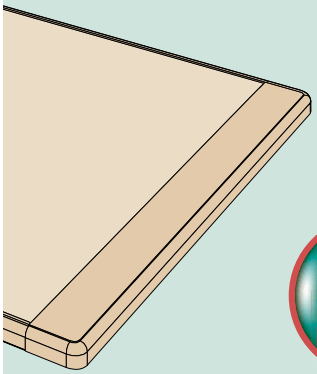

Breadboard-End Top

A	Center Panel (1)	¾ ply. - 42½ x 64
B	Side Trim (2)	1½ x 1½ - 64
C	Side Fillers (2)	¾ ply. - 6 x 52
D	End Fillers (2)	¾ ply. - 6 x 41
E	Breadboard Ends (2)	1½ x 4 - 44

- (10) Metal Tabletop Fasteners w/Screws

1½" x 8" - 96" Red Oak (10.6 Bd. Ft.)

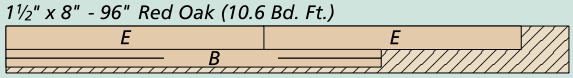

48" x 96" - ¾" Red Oak Plywood

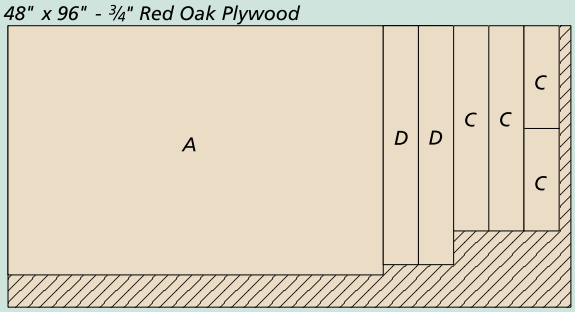

ALSO NEEDED: *¼" hardboard for splines*

GO 2 Online Extras

For more information on cutting the slots in the breadboard ends, visit our website: **WoodsmithSpecials.com**

Gardens
made easy!
Garden Gate
SONY
350+

designer Projects

Whether you need to store a favorite book collection, find a home for a new wide-screen TV, or just store some pint-size treasures, one of these designer projects is sure to tickle your fancy.

THREE BOOKCASES 36

TV CABINET 42

CONTOURED KEEPSAKE BOX 52

three Bookcases

We started with one basic "case" and added some unique details to end up with three distinct projects.

As soon as we decided to feature a bookcase in this book, I was flooded with suggestions. One person wanted traditional oak. Another was hoping it would be "country pine." And I was thinking about a simple bookcase made out of maple.

Instead of building only one of these bookcases, we decided to feature all three. The reason we could do this was because they all start the same. Each one started with the same basic "case" made up of sides, shelves, and a back. At that point, the only difference was the type of wood used.

The next step was to add the elements that gave each bookcase its unique appearance. First, each one got a slightly different face frame. Then a top panel and some molding. In the end, we were able to create three different-looking bookcases simply by changing the wood and a few details.

These bookcases go together fairly quickly. One reason for this is that we used plate joinery. Biscuits hold the cases together and the face frames as well. And in case it's been awhile since you've had your joiner out of the case, don't worry. There's an Online Extra that covers each of the joints used.

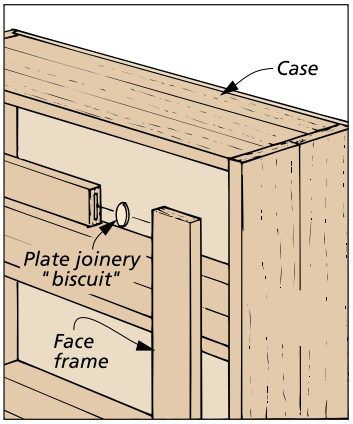

Face Frame. After the basic case was built, a face frame was added for strength. Plate joinery was used to join the face frame.

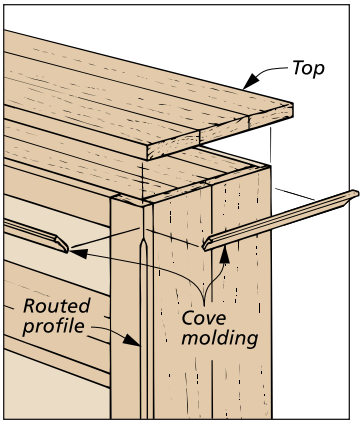

Add Details. With the face frame attached, each bookcase was given its unique personality by adding different moldings and profiles.

MATERIALS, SUPPLIES & CUTTING DIAGRAM

Case Materials (common to all bookcases)

A	Sides (2)	¾ x 11¼ - 55¾
B	Shelves (5)	¾ x 11 - 34½
C	Back (1)*	¼ ply. - 35½ x 51¾
D	Filler Blocks (2)	½ x ¼ - 4

- (46) #16 x ¾" Wire Brads

*On the country pine bookcase, this is beaded paneling (though you can substitute bead board planks).

¾" x 6" - 72" (Four Boards @ 3 Bd. Ft. Each)

¾" x 6" - 72" (Five Boards @ 3 Bd. Ft. Each)

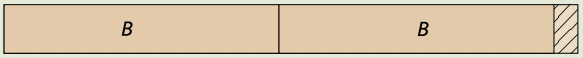

BASIC CASE CONSTRUCTION

Underneath the face frames and moldings of these bookcases is a simple case: solid wood sides connected with five shelves and a back, see Case Exploded View. The pieces are pretty much the same no matter which bookcase you're building.

GLUE UP PANELS. The first task is to tackle the solid wood panels. The two sides (A) and five shelves (B) are all glued up from ¾"-thick stock.

After the panels have been planed flat, they can be cut to size. Accuracy is important here. If the panels aren't consistent, the case won't end up square. So to help with these long panels, I used a simple crosscut sled on my table saw.

The sides are ¼" wider than the shelves. This extra ¼" is for the back, so I cut a rabbet along the back edge of each side to hold it, see detail 'a.'

Note: With the oak and maple cases, I used plywood for the back (slightly under ¼"). But for the pine bookcase, I purchased beaded pine plywood that was almost ⅜" thick.

CUT SLOTS FOR BISCUITS. At this point, the slots for the biscuits can be cut. With the side panels, the key thing is that the opposing slots align so the shelves will be level when the case is assembled. To ensure this, I clamped the sides back-to-back. Then I laid out the bottom edge of each shelf and clamped a straightedge along these lines, see Figs. 1 and 2.

This straightedge becomes the "corner" that the plate joiner butts against, see Fig. 2. I cut three slots in each side so the joint would be plenty strong when the shelves were loaded down with books.

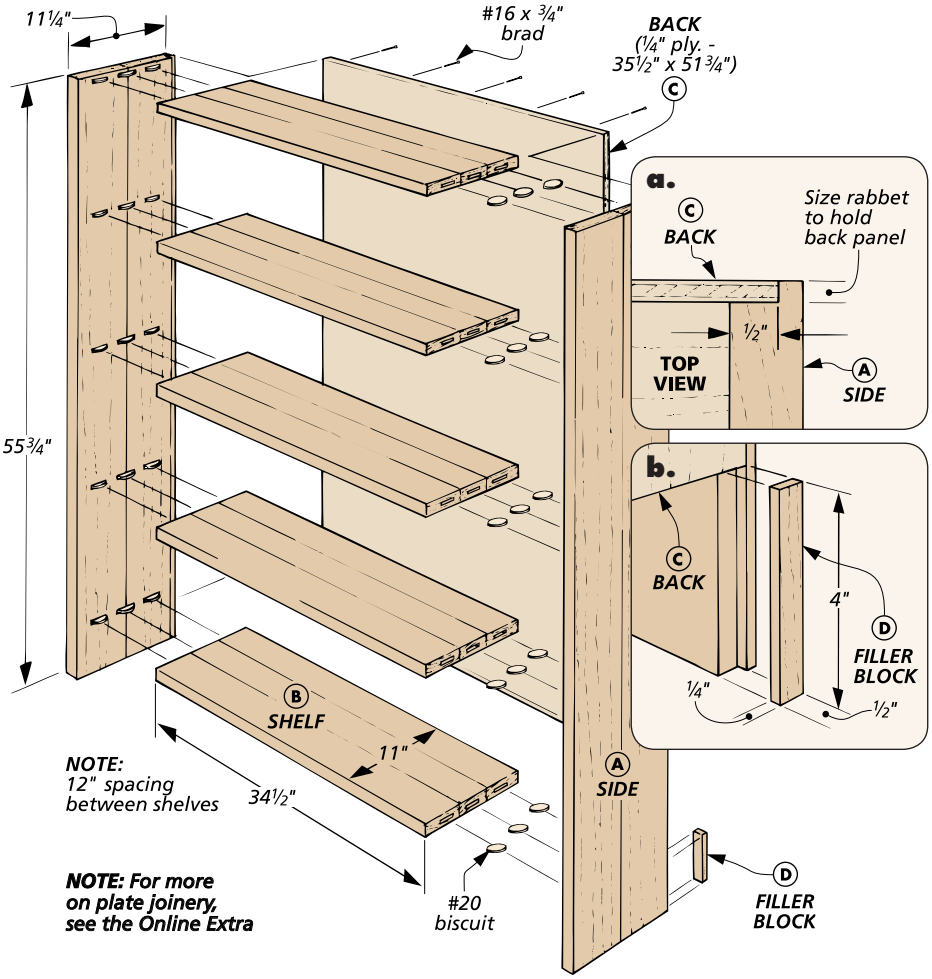

When the slots are cut in the sides, matching slots can be cut in the ends of the shelves. Just like the sides, you'll use the base (not the fence) of the plate joiner to reference the cuts.

Now the case can be dry assembled, and a back (C) can be cut so it fits between the rabbets and is flush with the top and bottom shelves, see Case Exploded View.

With the back cut to size, it's time to find someone to help you get the case assembled — it's a big job, and you have to work quickly. To buy myself a little extra time, I used liquid hide glue. I simply set the back in place to hold everything square.

After the glue dries, you can nail the back in place. Shop Tip: It's awkward to apply finish to the back after it's installed, so I do this before nailing the back in place.

When the back is on, the last thing to do is fill in the rabbets below the plywood panel. I simply cut two small filler blocks (D) to size and glued them in place, see detail 'b' above.

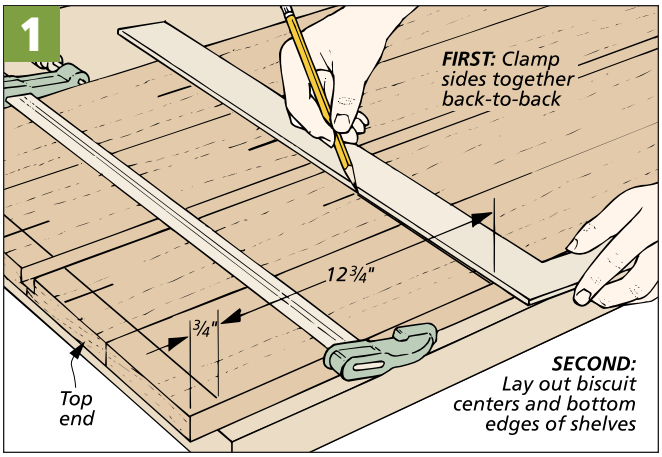

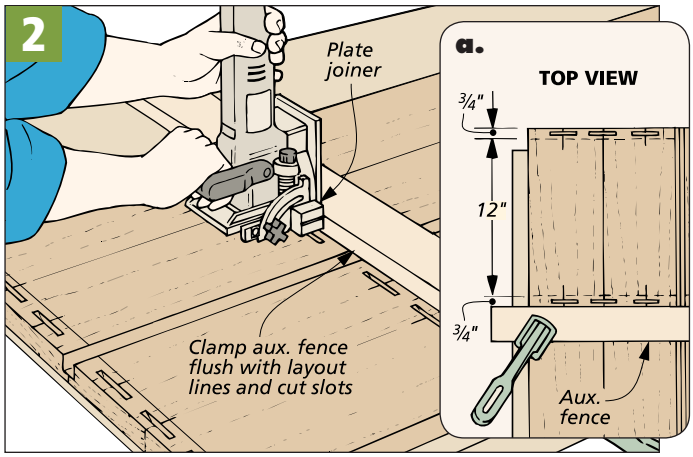

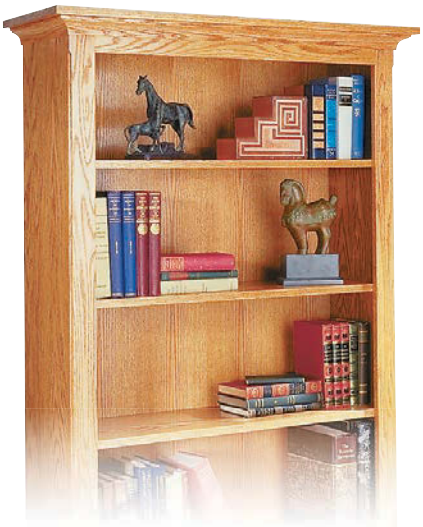

Distinctive Look. This traditional oak bookcase is "dressed up" with cove molding and a simple apron.

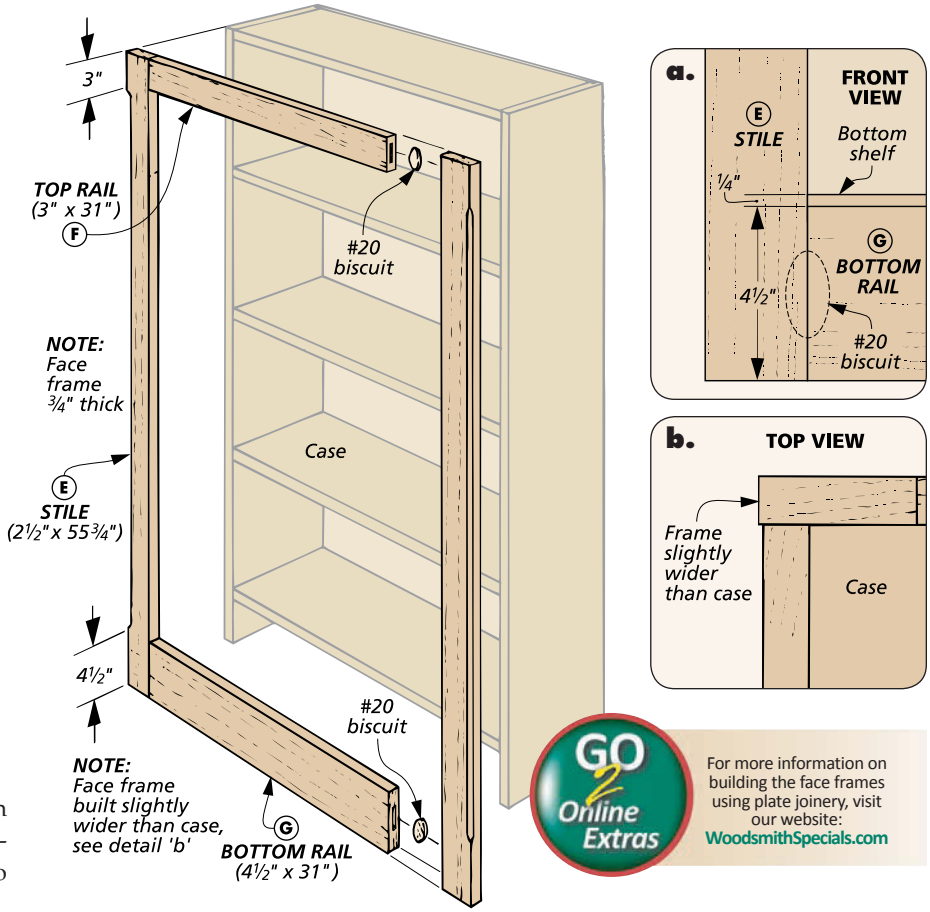

GO 2 Online Extras

For more information on building the face frames using plate joinery, visit our website: WoodsmithSpecials.com

oak Bookcase

With the basic case built, it's time to begin adding the elements that give each bookcase its particular "look." The place to start is with the face frame.

FACE FRAME. Regardless of which style bookcase you choose, the case needs a face frame to stiffen it and prevent it from racking, see drawing above.

Traditionally, the two stiles and two rails of a face frame would be joined with mortise and tenons (which you can use if you don't have a plate joiner, see the Online Extra).

However, whether you build the frame with mortise and tenon or use biscuits, you're going to have the same challenge. You have to build a large frame that covers the edges of the case exactly. And if the case is even a little out of square, the frame won't be flush even if it is the correct size.

To solve this problem, I like to build the face frame a smidgen wide. For these bookcases, I did this by ripping the stile pieces a hair wide (less than 1/16"), refer to detail 'b' above right. Then after the face frame is glued to the case, the sides of the frame can be trimmed to match the case.

STILES & RAILS. To build the frame, I started by cutting the stiles (E) to length, see drawing. Then I ripped them slightly wide. The top rail (F) and bottom rail (G) are both cut to finished size.

Now you can lay out and cut the slots for the biscuits, refer to the Online Extra for an article on plate joinery. (Or you can cut the mortise and tenon joints which can also be found at *WoodsmithSpecials.com*.) Then after the frame is glued together, it can be glued to the front of the case, see Fig. 1.

Note that the bottom rail (G) shouldn't be flush with the bottom shelf, see detail 'a' above. It's top edge ends up 1/4" lower than the shelf to create a simple shoulder.

At this point, the sides of the face frame can be trimmed flush. This was a good opportunity for me to get my block plane out and create some shavings, see Fig. 1a.

With the face frame trimmed, the last thing to do is rout a stopped 1/4" cove along the outside corners, see Figs. 2 and 2a. This is easy to do with a hand-held router — the base rests secure on the frame. And to stop the coves flush with the rails, I

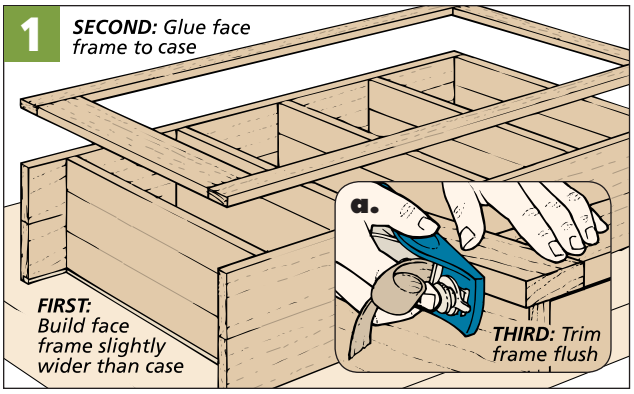

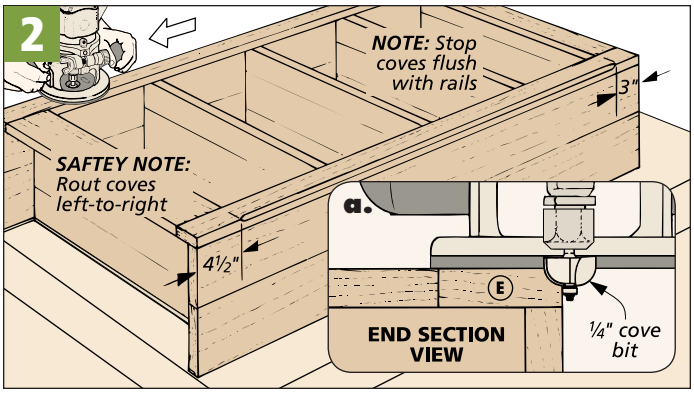

simply transferred their inside edges across the stiles with a square.

TRIM & TOP. With the face frame complete, it's time for the details that really make this bookcase distinct. First, I added the top and dressed it up with cove molding. Then I added an apron around the base.

TOP PANEL. Before you can add the cove molding, the ¾"-thick panel for the top (H) needs to be glued up and cut to size (14" x 40"), see Fig. 3. Then to allow for wood movement, I drilled oversize shank holes and used roundhead screws and washers, see Fig. 3a. (The top is centered side-to-side and flush with the back.)

COVE MOLDING. With the top in place, you can begin working on the cove molding underneath the top, see Fig. 3. (I found the 2"-wide molding at a local home center.)

Cove molding "leans" forward, so it requires compound miters. This typically means angling the miter gauge and tilting the saw blade. But to make the setup much easier, I like to tilt the molding and leave the blade square to the table. I do this with a simple cradle, see box below.

The other trick to cutting compound miters successfully is to put your tape measure away. Instead, cut the front corner of the sides and then hold it up to the case and mark the back edge. When it's cut to length, repeat this procedure for the other side piece of molding. Then clamp both sides in place, and sneak up on the final length of the front piece until it fits between the sides perfectly. When all the pieces are cut, I nailed the molding to the top, see Fig. 3a.

BASE APRON. With the cove molding on, the last pieces to add are the front (I) and side aprons (J) around the base, see Fig. 4. Unlike the cove molding, these pieces are joined with simple miters. But before cutting the miters, you need to rout the ogee profile along the top edge, see Fig. 4a.

I attached the aprons to the case the same way as the top. I allowed for wood movement by drilling ¼"-diamater holes in the case sides and using roundhead screws with washers, see Fig. 4a. But to keep the miters tight, I applied glue to each front corner.

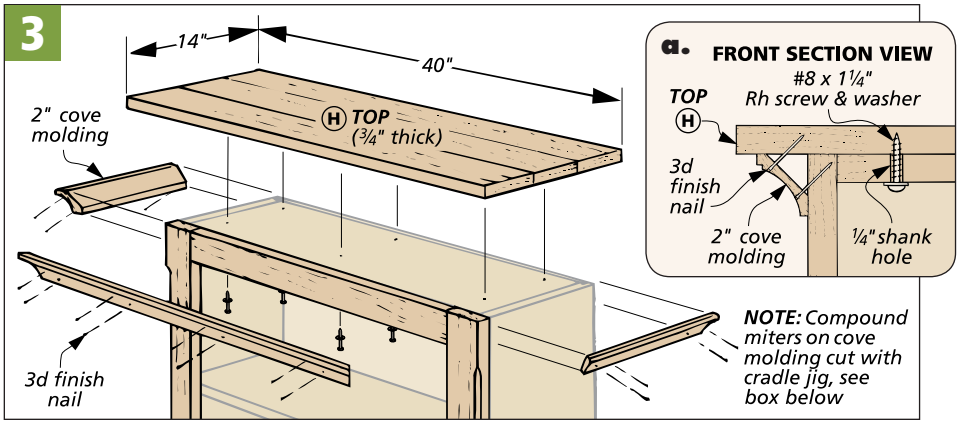

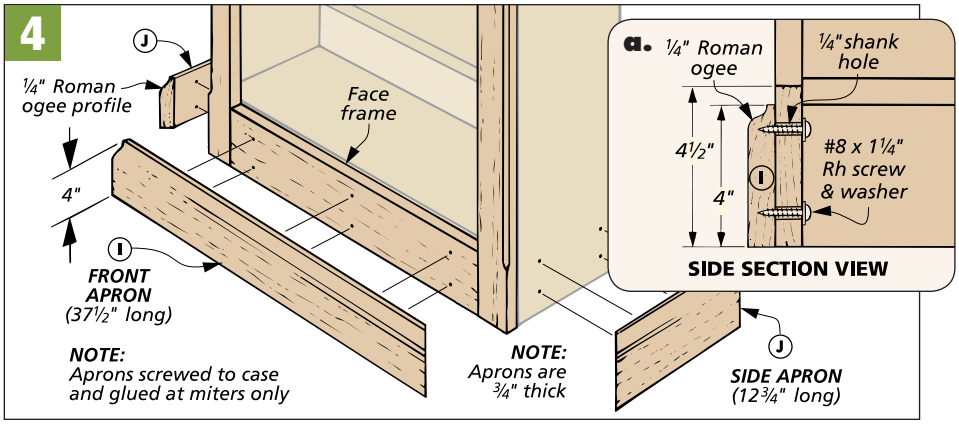

Cove Molding Cradle Jig

To simplify the table saw setup for cutting cove molding, I leave the saw blade square and use a simple cradle that attaches to the miter gauge and holds the molding at an angle, see drawing and detail 'a.'

There are two important things to note. First, the molding should always be placed upside down in the jig. Also, you'll still have to move the miter gauge from one side of the blade to the other, depending on the corner being cut.

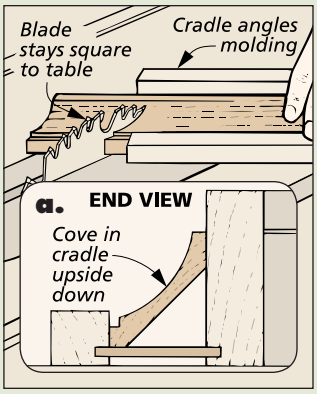

MATERIALS, SUPPLIES & CUTTING DIAGRAM

E	Stiles (2)	¾ x 2½ - 55¾
F	Top Rail (1)	¾ x 3 - 31
G	Bottom Rail (1)	¾ x 4½ - 31
H	Top (1)	¾ x 14 - 40
I	Front Apron (1)	¾ x 4 - 37½
J	Side Aprons (2)	¾ x 4 - 12¾

- (20) #8 x 1¼" Rh Screws
- (20) #8 Flat Washers
- (1) 2" Cove Molding (6ft.)
- (16) 3d Finish Nails

¾" x 6" - 84" Red Oak (3.5 Bd. Ft.)

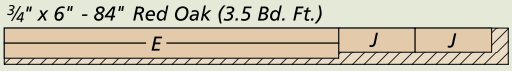

¾" x 6" - 84" Red Oak (3.5 Bd. Ft.)

¾" x 6" - 72" Red Oak (3 Bd. Ft.)

¾" x 4½" - 72" Red Oak (2.25 Bd. Ft.)

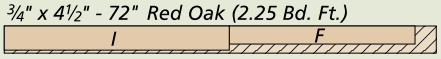

Country Charm. With a beaded back, cove molding, and foot profile, this pine bookcase will look at home in any "country" setting.

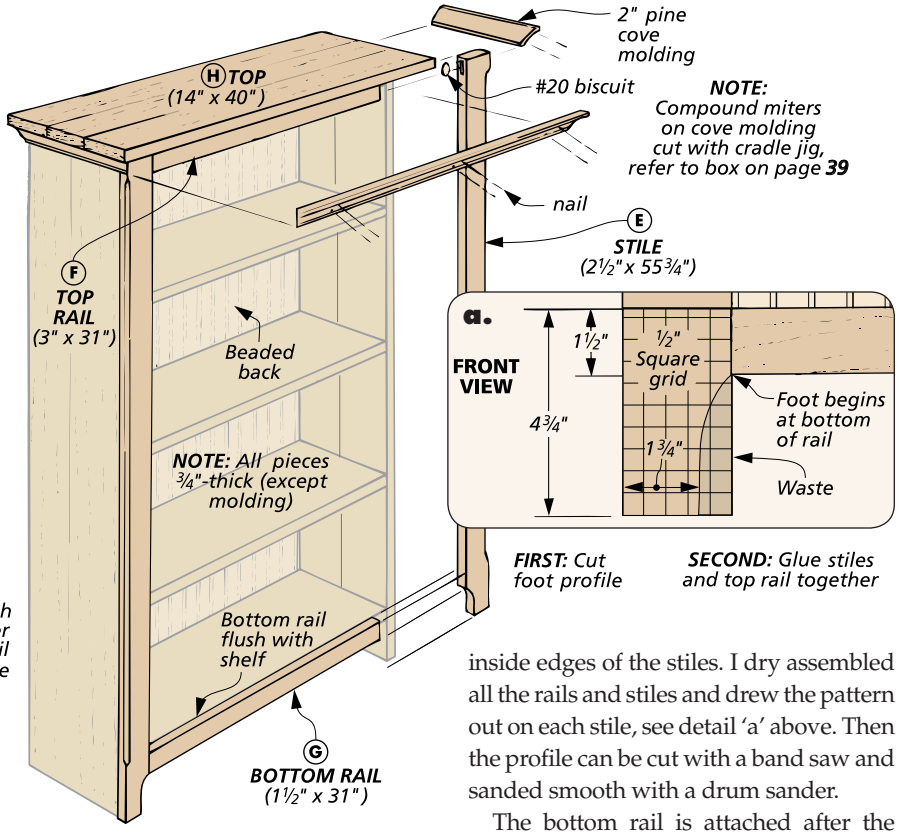

country pine Bookcase

In addition to the oak bookcase, we also wanted to build a less formal, "country" version, see photo. Pine was the obvious choice for the wood. But there were a few other details I had in mind as well.

BEADED BACK. First of all, I wanted the case to have a beaded back. Typically, this would be individual solid wood boards, see the box below right. But I found a 4x8 sheet of beaded pine plywood that was much easier to install. (It was about ⅜" thick, so the rabbet in the back of the case sides had to be a bit deeper, refer to detail 'a' in the Case Exploded View on page 37.)

FACE FRAME. The other big difference is the "foot" profile on the bottom of the frame. This profile required a few adjustments to the building process.

The size of the face frame is the same as the oak bookcase — except for the bottom rail. I started by cutting the stiles (E), top rail (F), and bottom rail (G) to size. The bottom rail is only 1½" wide, which is too narrow to use biscuits. So I used biscuits to create a U-shaped assembly with the stiles and top rail.

But before gluing these three pieces together, I created the feet on the bottom, inside edges of the stiles. I dry assembled all the rails and stiles and drew the pattern out on each stile, see detail 'a' above. Then the profile can be cut with a band saw and sanded smooth with a drum sander.

The bottom rail is attached after the U-shaped assembly has been glued to the case. (I did dry clamp the bottom rail in place to keep the frame square.) Then the bottom rail can be glued flush with the top of the bottom shelf.

TOP & COVE MOLDING. After the frame is trimmed flush to the case and the cove profile is routed on the outside edges, all that's left is to add the top (H) and some 2" cove molding, see drawing above. Again, to cut the compound miters for the molding, I used a cradle jig, see the box on page 39.

FINISH. To give the pine a warm, golden tone, I applied a wood conditioner (to reduce any blotching) and stained the wood a honey maple color. Then I added a few coats of a wipe-on finish. (I painted the beaded back before attaching it to the case.)

MATERIALS, SUPPLIES & CUTTING DIAGRAM

E	Stiles (2)	¾ x 2½ - 55¾
F	Top Rail (1)	¾ x 3 - 31
G	Btm. Rail (1)	¾ x 1½ - 31
H	Top (1)	¾ x 14 - 40

- (6) #8 x 1¼" Rh Screws
- (6) #8 Flat Washers
- (1) 2" Cove Molding (6ft.)
- (16) 3d Finish Nails

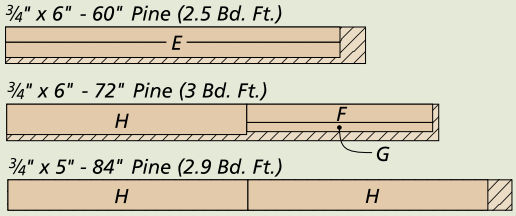

Beaded Board Back

If you can't locate any beaded pine plywood for the case back, don't worry. Before there was plywood, cabinets had solid wood backs.

One way to allow these solid wood backs to expand and contract freely was to use "beaded" boards, see photo. These had interlocking tongues and grooves on their edges, which held the back together but still allowed the pieces to expand and contract.

maple **Bookcase**

The last bookcase I built was made out of maple, see photo at right. Of the three bookcases, this one is the simplest to build. There's no molding to install at the top or bottom — just a face frame (with a curved top rail) and a glued-up panel on top, see drawing below.

FACE FRAME. After the maple case had been assembled, I began work on the face frame. What's unique about this frame is that the stiles and rails are different thicknesses. I cut the stiles (E) from ¾"-thick stock, but the top rail (F) and bottom rail (G) are only ½"-thick. This way, the stiles stand proud like a couple of simple columns.

When the stiles and rails have been cut to size, the curve can be cut on the top rail (F), see detail 'c' below. There are a couple ways you can lay out this large curve. You can either draw a half pattern and trace it onto the workpiece. Or you can put a few nails on the back face of the rail blank, bend a flexible straightedge against them, and trace along this straightedge. (A narrow strip of ⅛" hardboard is flexible enough for a curve this large.)

When the layout of the curve is complete, you can cut it with a band saw or jig saw. Stay to the waste side of the line and then sand it smooth.

Next, a ⅛" roundover can be routed on all of the face frame pieces. The stiles are routed on both front edges. But on the two rails, I rounded over just the inner edges (the curved lower edge of the top rail and the upper edge of the bottom rail).

At this point, the face frame is ready to be assembled with biscuits. Here, the different thicknesses force you to work a little "backwards." Instead of working off of the front faces of the stiles and rails, you have to lay out and reference the plate joiner on the back faces of these pieces — the ones that will end up flush. Then the face frame can be glued together and glued to the case. Note: The upper edge of the bottom rail (G) isn't flush with the bottom shelf, see photo. This rail sets ¼" below the top of the bottom shelf.

Simple Elegance. On this maple bookcase, the rails are thinner and "set back" from the stiles to create a shadow line.

TOP PANEL. After the face frame has been trimmed flush with the sides of the case, the only thing left to do is glue up a ¾"-thick solid wood panel for the top (H), see drawing at left.

Because there's no molding underneath this panel, it's simply cut to overhang the front and sides 1". (It's flush with the back.) On its front and side edges, I routed a ⅛" roundover, just like the ones on the face frame.

Finally, when screwing the top to the case, I drilled oversize ¼"-dia. shank holes to allow the panel to expand and contract, see detail 'a.' To finish the bookcase, I didn't apply any stain. Instead, I wiped on three coats of a "satin" finish.

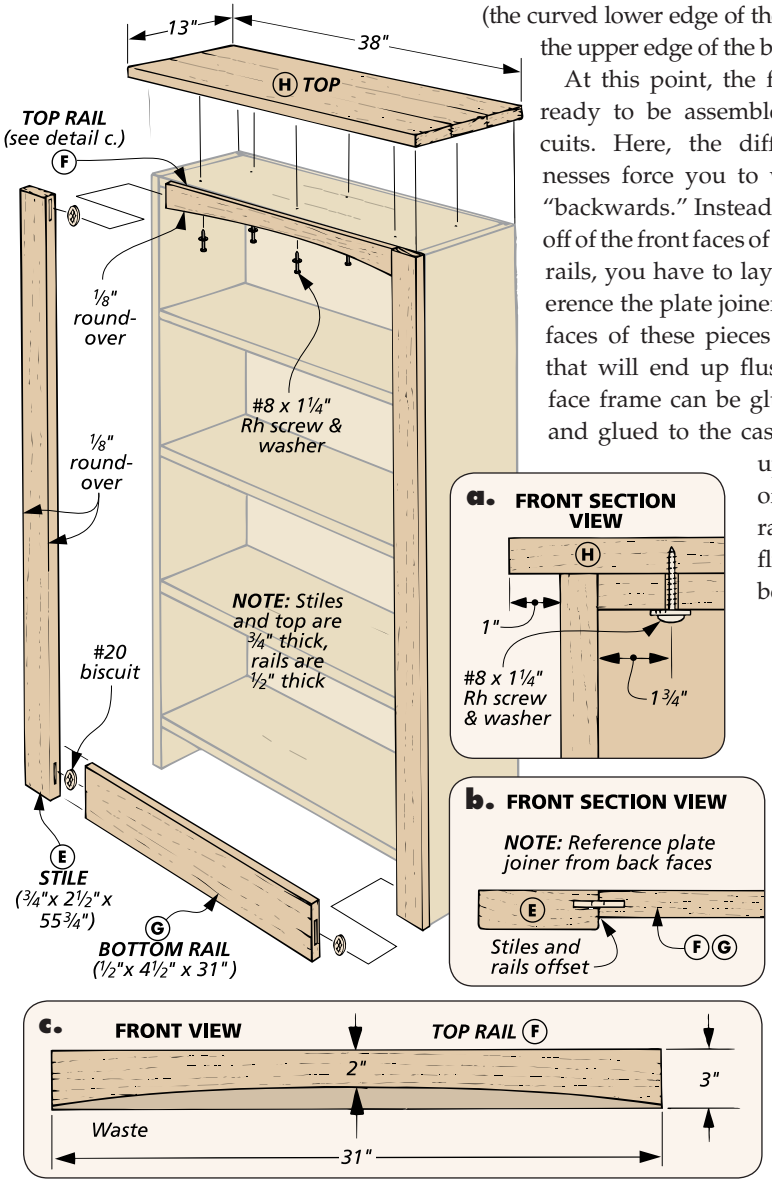

MATERIALS, SUPPLIES & CUTTING DIAGRAM

E	Stiles (2)	¾ x 2½ - 55¾
F	Top Rail (1)	½ x 3 - 31
G	Btm. Rail (1)	½ x 4½ - 31
H	Top (1)	¾ x 13 - 38

- (6) #8 x 1¼" Rh Woodscrews
- (6) #8 Flat Washers

¾" x 6" - 60" Maple (2.5 Bd. Ft.)

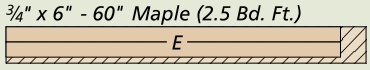

¾" x 5" - 72" Maple (2.5 Bd. Ft.)

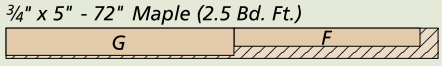

¾" x 5" - 96" Maple (Two Boards @ 3.3 Bd. Ft. Each)

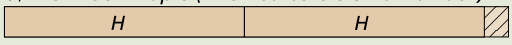

contemporary Wide-Screen TV Cabinet

Simple lines, classic joinery, and lots of storage combine to make this project both functional and a great-looking addition to your home.

Televisions have changed a lot over the years. So it's only natural that the cabinets and stands that house them have also changed. The sleek, low-profile design of this TV cabinet fits right in with the new flat-panel televisions. Your television will look right at home sitting on top or mounted on the wall behind the cabinet.

If you look at the photo, you'll see it's wide enough to handle most large-screen LCD TVs. And down below, there's no lack of space for all your electronic equipment. Behind the lattice doors, there are adjustable shelves. The large drawer adds even more storage for your expanding DVD or Blu-Ray collection.

What you'll really appreciate is how easy it is to build. It's a simple plywood case trimmed out with a solid wood top, face frame, and base. The lattice doors may look tricky to build, but our step-by-step guidance takes all of the guesswork out of the construction. They help finish things off for a great look in any room.

Construction Details

OVERALL DIMENSIONS:
75"W x 28"H x 20"D

Solid wood top supports heavy loads

Dado joints and screws secure partitions in case assembly

Plywood back has cutouts for wiring and ventilation

Center sections provide easy access to electronic components

Tongue and dado joints make a strong case assembly

Different thickness of rails and stiles creates an offset joint

Hardwood face frame covers plywood edges

Solid wood base is attached to case with cleats

Large drawer uses rabbet joinery for fast construction

Pocket hole joinery makes a strong base assembly

Offset stub tenon and groove joinery adds visual interest

GO 2 Online Extras

For information on making frosted glass door panels, check out: WoodsmithSpecials.com

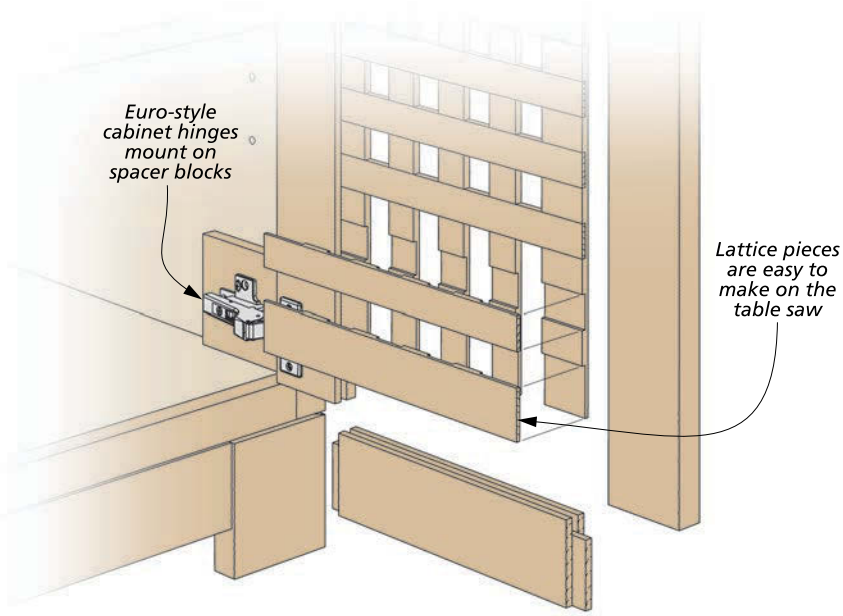

Door Panel Options. For a different look, you can build doors with frosted glass panels. For details, go to *WoodsmithSpecials.com*.

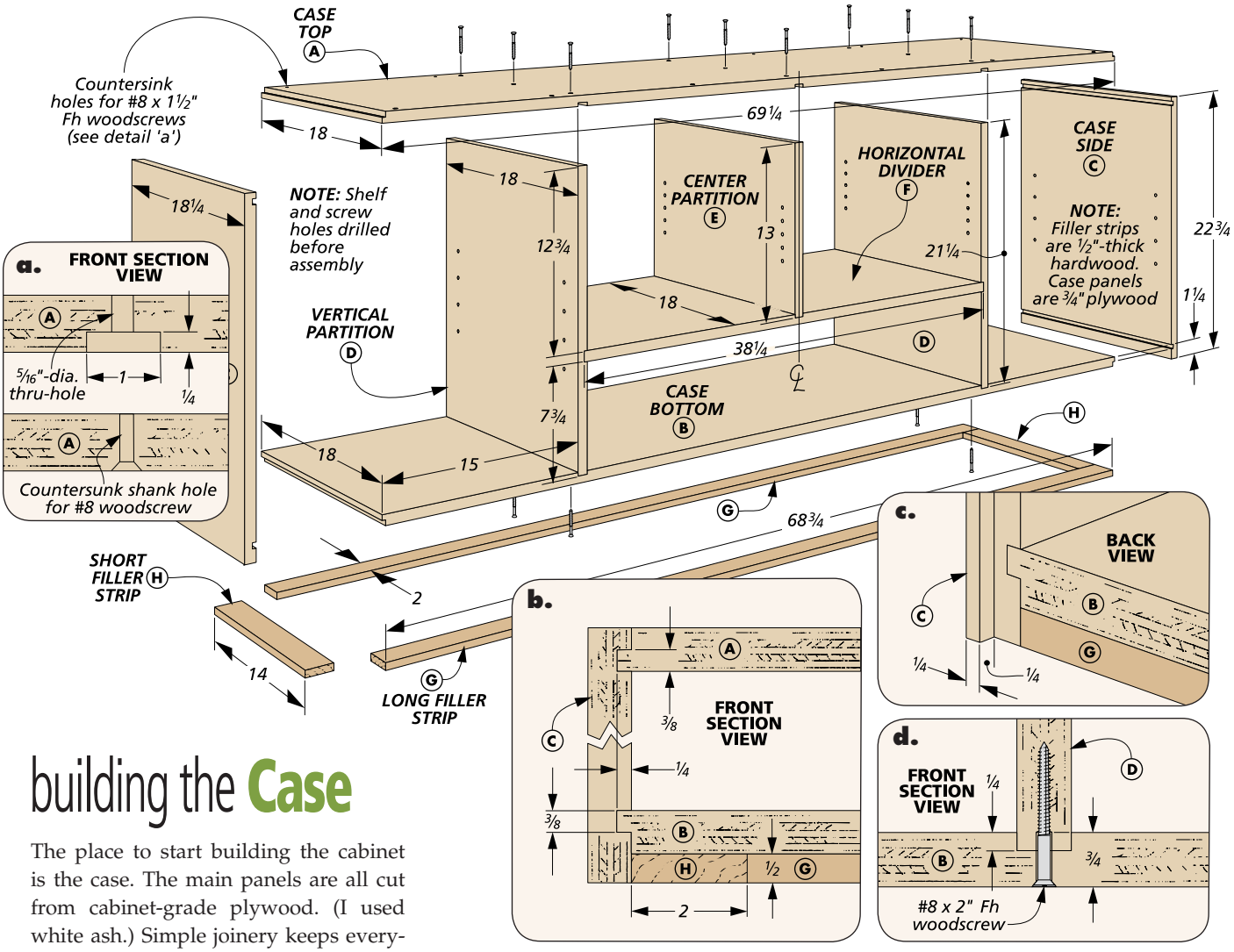

building the Case

The place to start building the cabinet is the case. The main panels are all cut from cabinet-grade plywood. (I used white ash.) Simple joinery keeps everything square and easy to assemble.

BUILDING THE BASIC BOX. I started by cutting the top, bottom, and side pieces to size. After that's done, it's time to get out the router to start on the dadoes and rabbets for the joinery.

DADOES. The top and bottom will get dadoes on their inside faces to house the vertical partitions (see drawing above). To make sure that the top and bottom dadoes lined up, I clamped both pieces side-by-side, laid out the dadoes, and then routed them with a straight bit.

You can see in the drawing above that the top piece had an additional dado to house the center partition. So you'll want to rout this dado while you've got things set up.

TONGUES & DADOES. Now you can switch to a rabbeting bit and cut the tongues on the ends of the case top and bottom, as shown in detail 'a' above. While you're at it, rout a rabbet on the back edge of the side pieces for the back panel. Then change over to a straight bit to rout the matching dadoes in the two sides. Just be sure to locate the bottom dado so that you can add the filler strip (detail 'b' above).

HOLES. Before gluing up the case, you can go ahead and drill the holes in the top and bottom pieces that will be used for attaching the partition assembly (drawing at left). You'll also need to drill holes in the

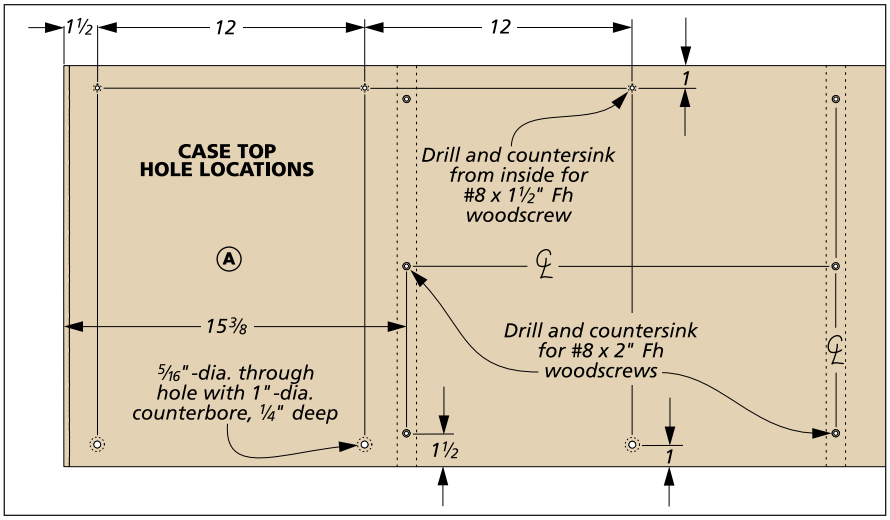

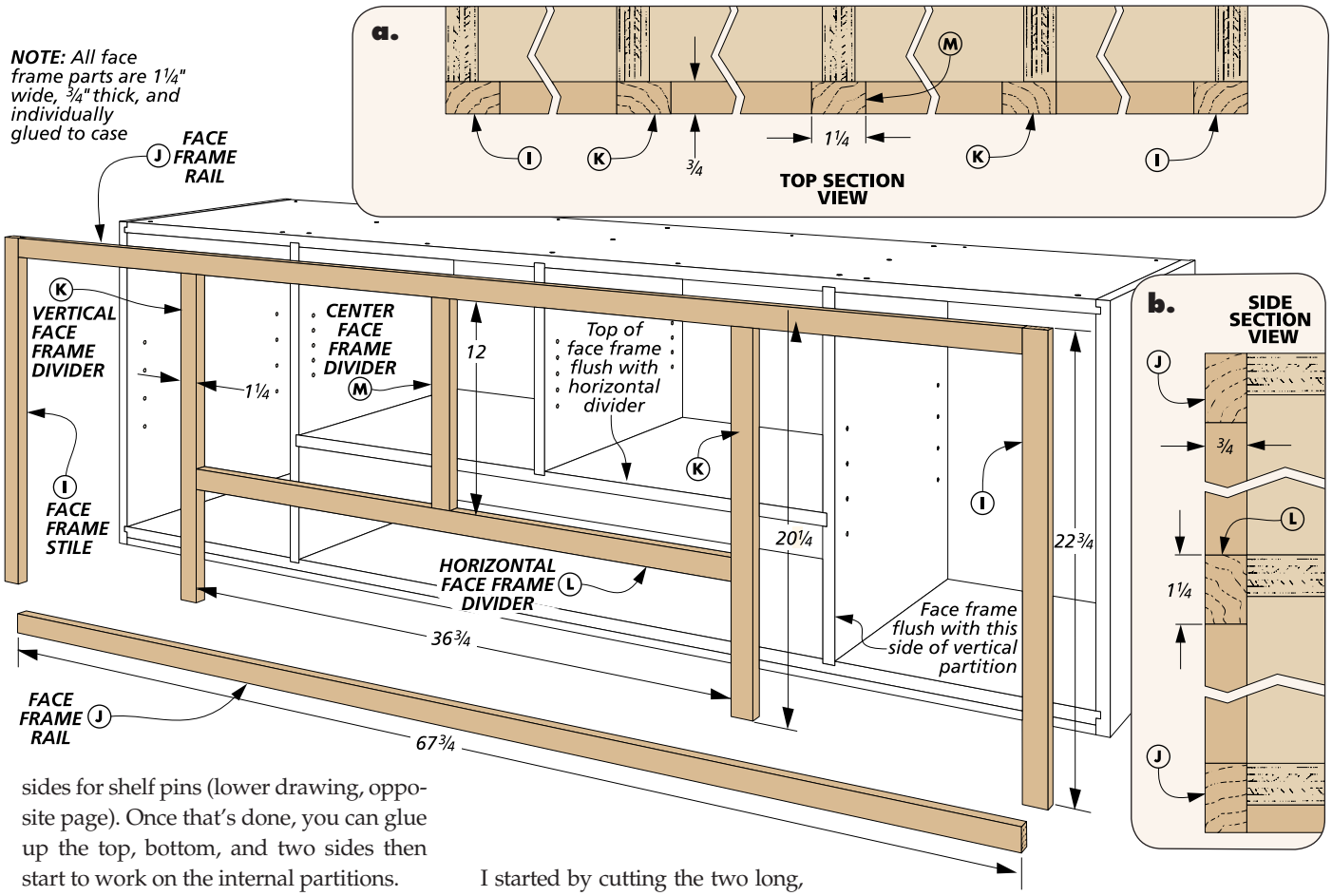

sides for shelf pins (lower drawing, opposite page). Once that's done, you can glue up the top, bottom, and two sides then start to work on the internal partitions.

PARTITION ASSEMBLY. There's nothing too tricky about making the partitions. The main drawing on the opposite page shows how it's all assembled. The two taller, vertical pieces are cut to fit between the dadoes of the case top and bottom. A horizontal divider fits in dados on the two vertical pieces. And there's a center, vertical partition that divides the upper space.

I started by cutting the two long, vertical partitions to size. The goal was to get a snug fit in the dadoes of the case. Next, cut the dadoes that will house the horizontal divider. Then you can slide the vertical pieces into the case and cut the horizontal divider to fit. The last step is to cut a centered dado on the horizontal divider to hold the short, center partition.

SHELF PIN HOLES. Before fastening the partition pieces in the case, it's a good idea to drill all of the holes for the shelf pins (see drawing below). The trick is laying out the holes on the proper face of the workpiece. All of the holes are stopped holes except for those in the short, vertical partition. These holes can be drilled all the way through.

Finally, you can glue the partition pieces into the case and fasten them in place with screws. Now is when you'll want to make sure everything is square before you move on to adding the face frame.

FACE FRAME. The face frame shown above is pretty straightforward. What's nice is you don't have to preassemble the entire frame then try to make it fit. Each piece is cut to fit and glued in place separately.

I started with the two end stiles, making sure they were flush on the outside edges, top, and bottom. Then you can cut the two long horizontal rails to fit between the stiles and glue them in place. Next, I trimmed out the vertical partitions, followed by the piece that covers the horizontal divider. Finally, you can add the shorter, vertical piece to the center partition. Next, you'll turn your attention to the base.

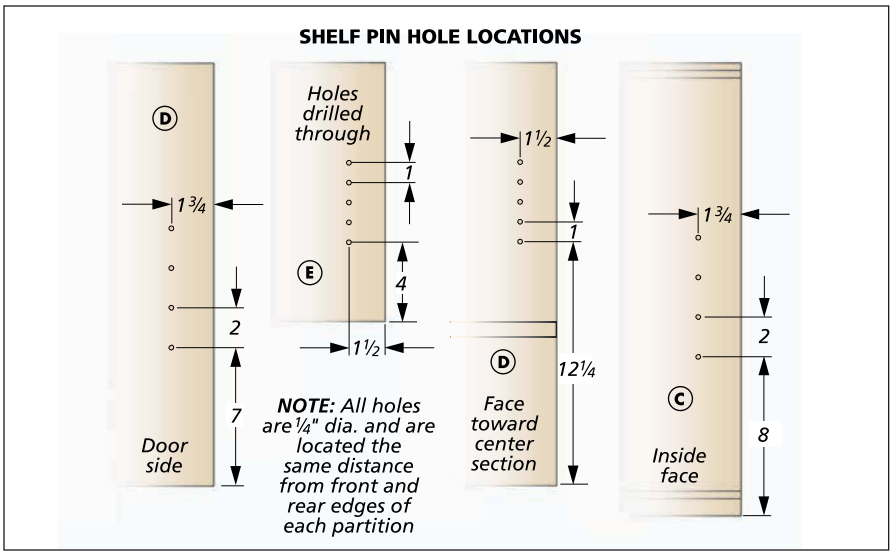

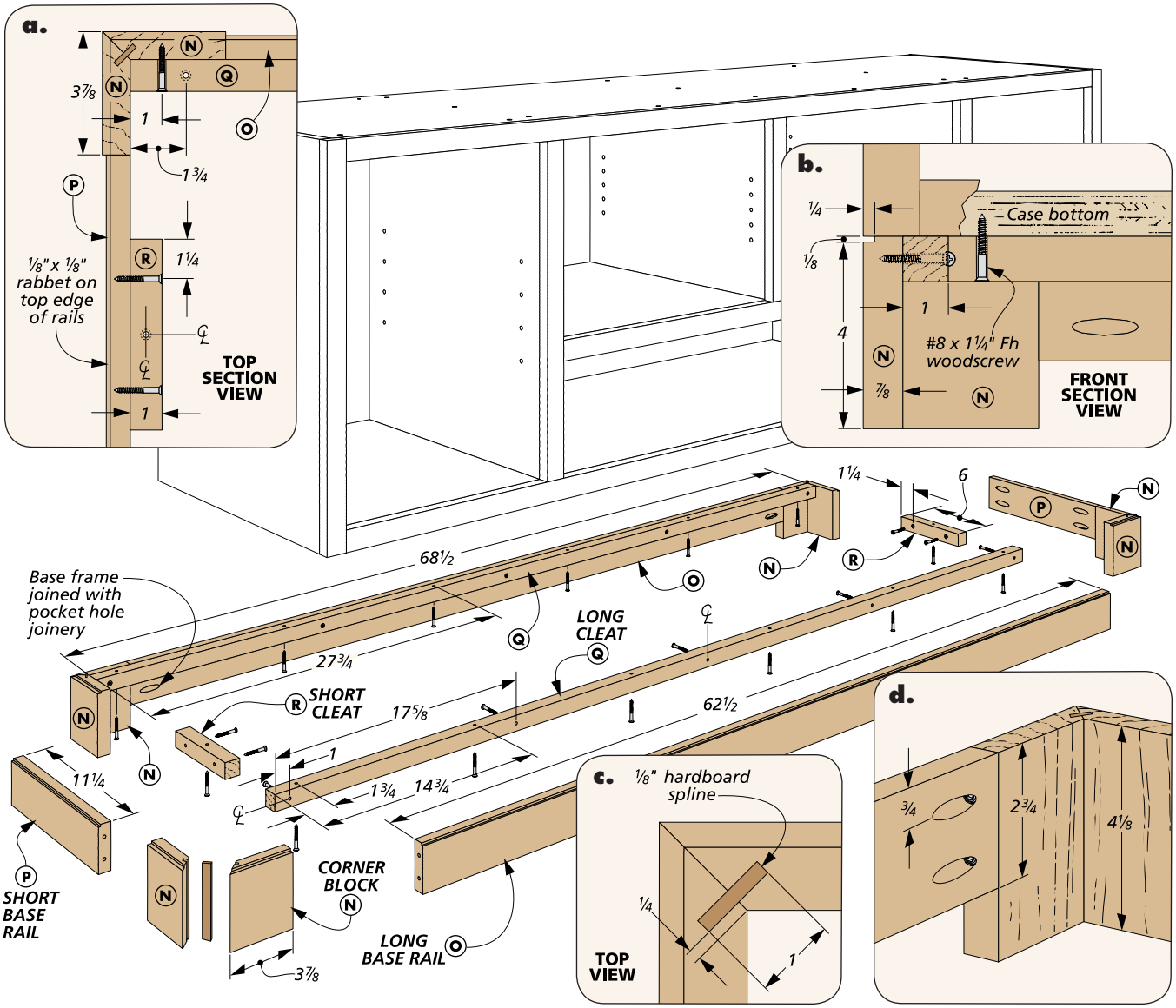

assembling the Base

With the case complete, you can begin working on the base. As you can see above, the base is made up of ⅞"-thick mitered corner assemblies connected by ¾"-thick rails. This creates a relieved, or offset joint. The top edge of the base is rabbeted to form a reveal — or shadow line — between the base and case (see detail 'b' above).

Pocket hole screws join the rails to the corner blocks. You'll use splined miter joints to make the corners. And that's a good place to start.

CORNER BLOCKS. The four corner blocks are identical. The grain runs vertically and a splined miter joint connects the two pieces. I found it easier to bevel the edge of a couple of long blanks then cut the groove for the spline on the blanks.

SPLINED MITERS. The box at the bottom of the opposite page shows how I cut the slot for the splines using a standard blade with a ⅛" kerf. Since the joint won't show, I used a hardboard spline (detail 'c' above). You can cut the corner blocks to final length, then glue up the pairs using the splines. Finally, you can rout the shallow rabbet on the top, outside edge of the blocks.

RAILS. Because pocket hole screws join the rails to the corner blocks, you can simply cut the rails to length. To get the exact length of the rails, I set the corner blocks on the case so that the outside faces were flush with the case. Then it was a simple task to measure between them for the length of the rails. I went ahead and routed the rabbeted reveal on the top edge of the rails before moving on.

Once that's all done, you can fasten the rails to the corner blocks with pocket hole screws, keeping the back faces flush with one another (detail 'd'). A ⅛"-thick spacer helps with clamping and alignment. Now you can add the cleats.

HARDWOOD CLEATS. You can see above that the cleats are nothing more than hardwood strips fastened to the inside of the base. The top of the cleat is flush with the top of the base.

The length of the cleats and locations of the screws aren't critical, but the drawings above give you some guidelines. After the cleats are fastened to the base, you can attach the base to the case (detail 'b').

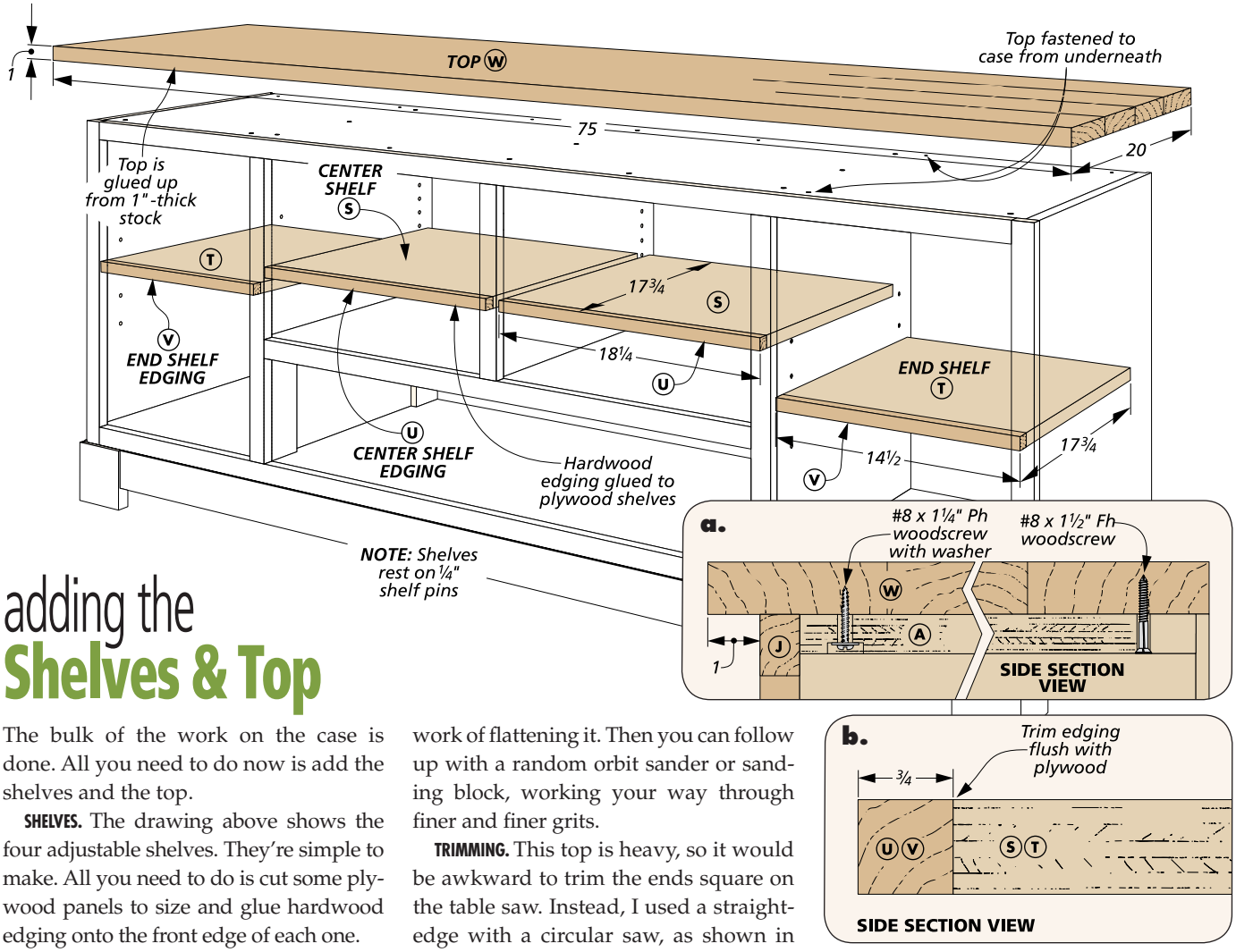

adding the Shelves & Top

The bulk of the work on the case is done. All you need to do now is add the shelves and the top.

SHELVES. The drawing above shows the four adjustable shelves. They're simple to make. All you need to do is cut some plywood panels to size and glue hardwood edging onto the front edge of each one.

I cut the edging just a little wide to slightly extend past the edges of the plywood. After the glue was dry, I used a hand plane to trim the edging flush to the plywood. You could also use a router with a flush trim bit or a sanding block. Just be careful that you don't sand through the thin veneer of the plywood.

GLUED-UP TOP. Now you're ready to move on to the top. It's glued up from 1"-thick stock. Since it's the "crown" of the project, I took some extra time to sort through the lumber stack to get the best pieces. You're looking for a good color and grain match between the boards. The goal is to make your glue lines as inconspicuous as possible.

SECTION WORK. If you have access to a planer, you can glue up the top in two sections, run each section through the planer, then glue up the two sections. This will help get a flat, smooth top.

Once you've got the entire top glued up, you can work on smoothing it. Careful use of a belt sander can make quick work of flattening it. Then you can follow up with a random orbit sander or sanding block, working your way through finer and finer grits.

TRIMMING. This top is heavy, so it would be awkward to trim the ends square on the table saw. Instead, I used a straightedge with a circular saw, as shown in the box below.

After you've cut the ends square, you can sand them smooth with a sanding block. And while you're at it, you can slightly ease all the edges of the top to soften sharp corners.

ATTACH THE TOP. Now you can fasten the top through the oversized holes in the case. This will allow the top to move with changes in humidity. Next, you'll start on the doors and then add the drawer.

Shop Tips: Splines & Trimming

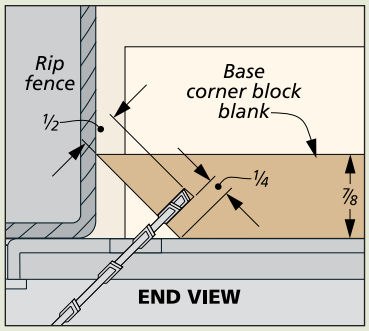

Cutting Spline Slots. Use the table saw to cut a straight, clean slot for the splined miter joints.

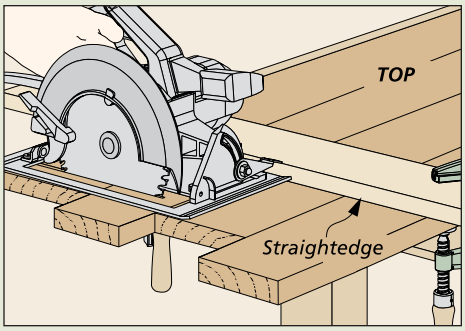

Squaring Up a Top. To trim the ends of the glued-up top, use a sturdy straightedge and a circular saw with a fine-tooth carbide blade.

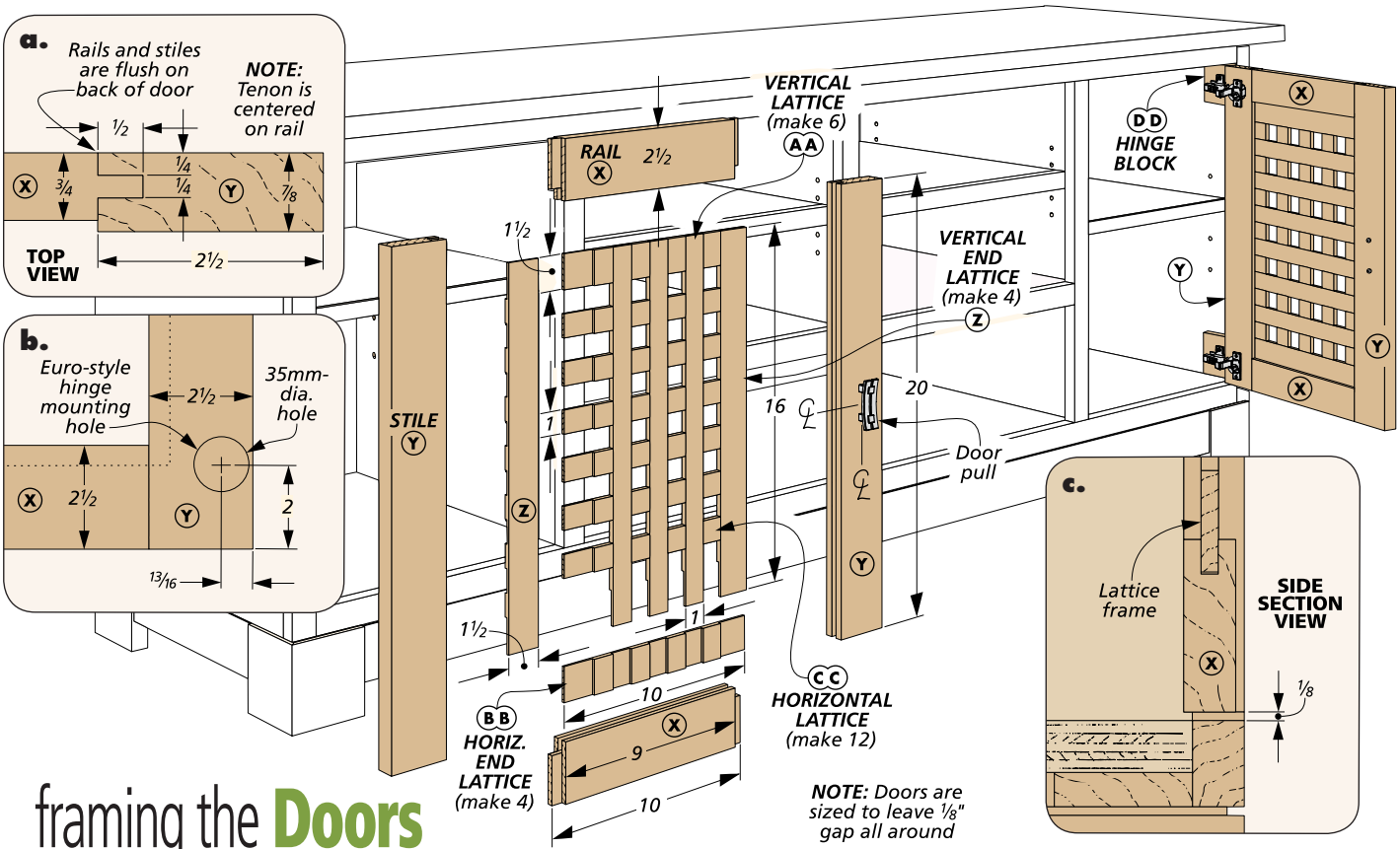

framing the **Doors**

The thing that grabs your attention right off the bat on this project is the lattice door panels. The lattice is really a series of half-lap joints in strips of wood that are glued together to form a panel.

This panel fits into a groove in the rails and stiles of the door frame. But before you can work on the lattice panel, you need to make the door frames. They're made up of ⅞"-thick stock for the stiles and ¾"-thick stock for the rails, as shown in detail 'a' above. And since the joinery is a stub tenon and groove, the groove in the stiles need to be slightly offset from the center.

OFFSET GROOVE. If you look at detail 'a', you'll see what I mean about the offset groove in the stiles. It's not hard to locate this groove if you cut the tenon on the rails first. The box below shows you how I did this with a ¼" dado blade. It just takes some time to get everything set up right so you can get a snug fit.

Now is a good time to put the pieces for the door frames aside and turn your attention to the lattice panels. You need to have them in hand before gluing up the frames.

LATTICE PANELS. It's not hard to cut all the pieces for the lattice panels. It's a lot of repetitive work, but if you pay attention, it should go smoothly. The box on the next page shows you how I started with wide blanks, cut the notches for the lap joints, then ripped the pieces to width.

GLUING UP THE DOORS. Once the panels are complete, you can insert them in the door frames. But I didn't glue the panels in place. I wanted them to be able to move with changes in humidity. Now you can go ahead and glue up the door frames, making sure they're square.

THE DOORS. Before mounting the doors, you need to add some mounting blocks for the hinges. These blocks need to be flush with the inside edge of the face frame, as shown in the drawing at the top of the opposite page.

How-To: Offset Tenon & Groove

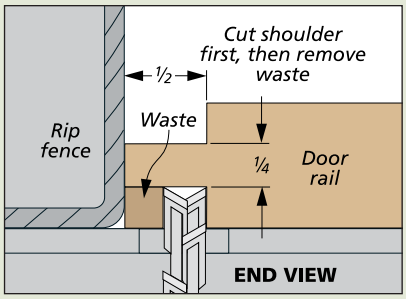

Start with the Tenon. Use a ¼"-wide dado blade to form the tenons on the rails. Flip the workpiece to center the tenon.

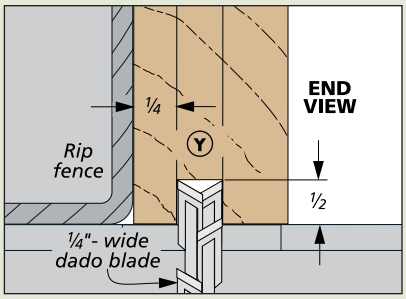

Locate the Groove. Position the rip fence for cutting the groove in the rails and stiles. The groove in the stiles will be offset.

GO 2 Online Extras

To learn how to make doors with glass panels, visit our website at: WoodsmithSpecials.com

Once the hinge blocks are glued in place, you can mount the hinges on the doors and set them in the opening. I used ⅛"-thick spacers to help maintain a consistent reveal all the way around the door.

Next are the door stops. They're just hardwood blocks glued in place behind the face frame. The drawing on the far right shows the location.

All that's left to do now is add the door pulls. Then you can start on the drawer and back panel.

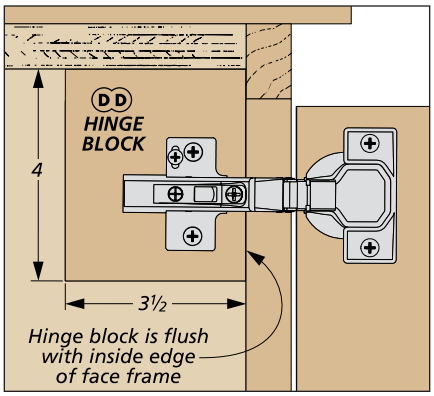

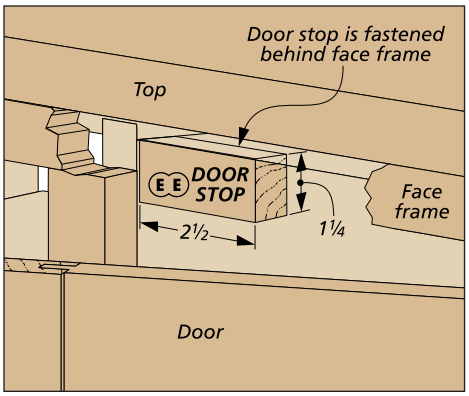

How-To: Making a Lattice Panel

The trick to making all the pieces for the lattice panels is to start with several wide blanks, as shown on the right. This way, you can cut the notches for the lap joints all at once and know they'll all be lined up when you assemble the lattice. Then the strips can be ripped to width to fit the notches.

Cutting Dadoes. To start off, you're really just cutting a series of dadoes in wide blanks. The trick is to lay them out accurately. I found it easier to mark the dado location on the edge of the blank. Then I could align the marks with the dado blade to cut the dadoes in a couple of passes.

Setting Up. I used a ¾" dado blade in my saw to cut all the joints for the lattice. To get the right blade height, I used a scrap that was the same thickness as my blank. I adjusted the blade height to cut to the center of the thickness of the test piece.

Start On The Ends. To start things off, I cut the lap joints on the ends of the blanks first, using the rip fence as a guide. Then I flipped the blank end-for-end and made the same cut. Now you can move the fence to line up for the dadoes.

Two Passes. Looking at the drawings on the right, you can see how I aligned my layout marks with the dado blade. Then I used a spacer at the end of the blank against the rip fence to nudge the piece over to make the second cut. Last, you can rip the pieces to width.

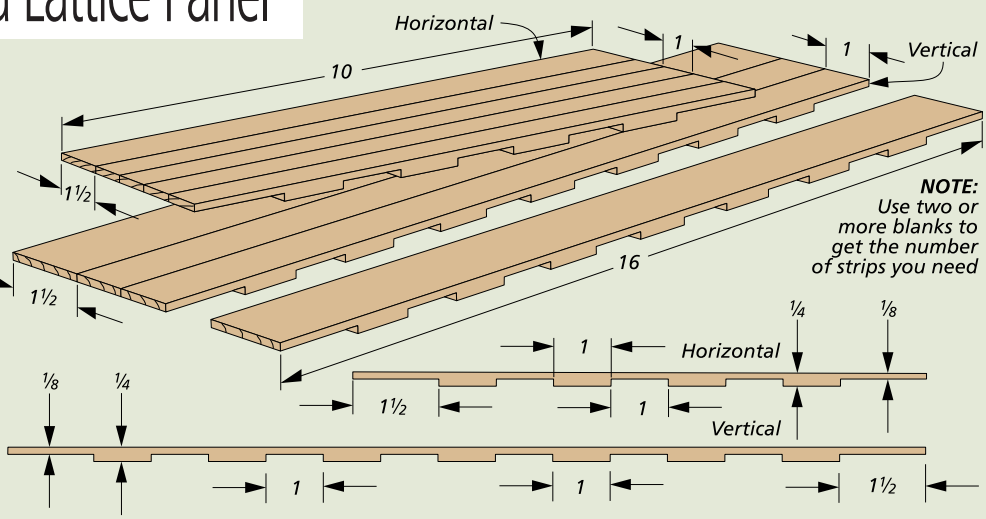

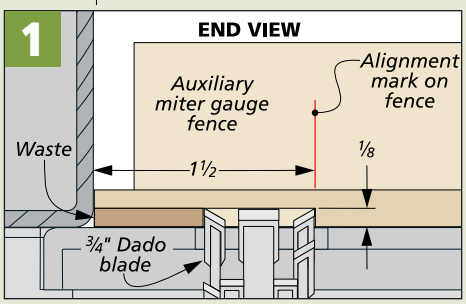

Starting at the Ends. Use the rip fence as a guide to cut the lap joints on the ends of the blanks with a dado blade.

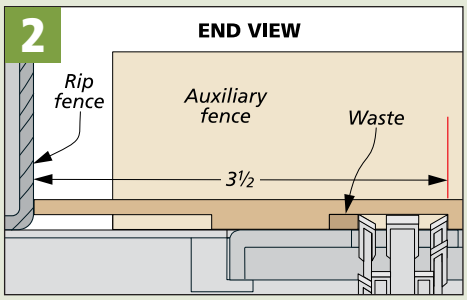

Align for the First Pass. Use your layout lines to line up the dado blade to make the first pass for cutting the dado.

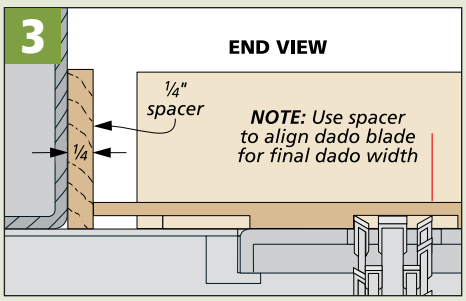

Use a Spacer. To make the 1"-wide dado, add a ¼" spacer against the rip fence to move the blank over, then make a second pass.

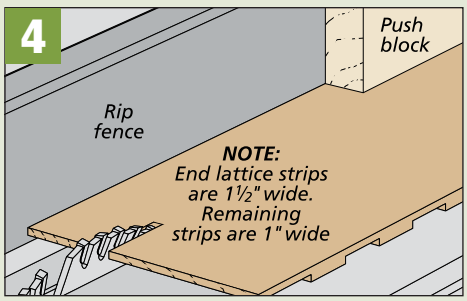

Rip to Width. Rip the workpieces to width from the blank. Aim for a snug fit in the corresponding pieces that make up the panel.

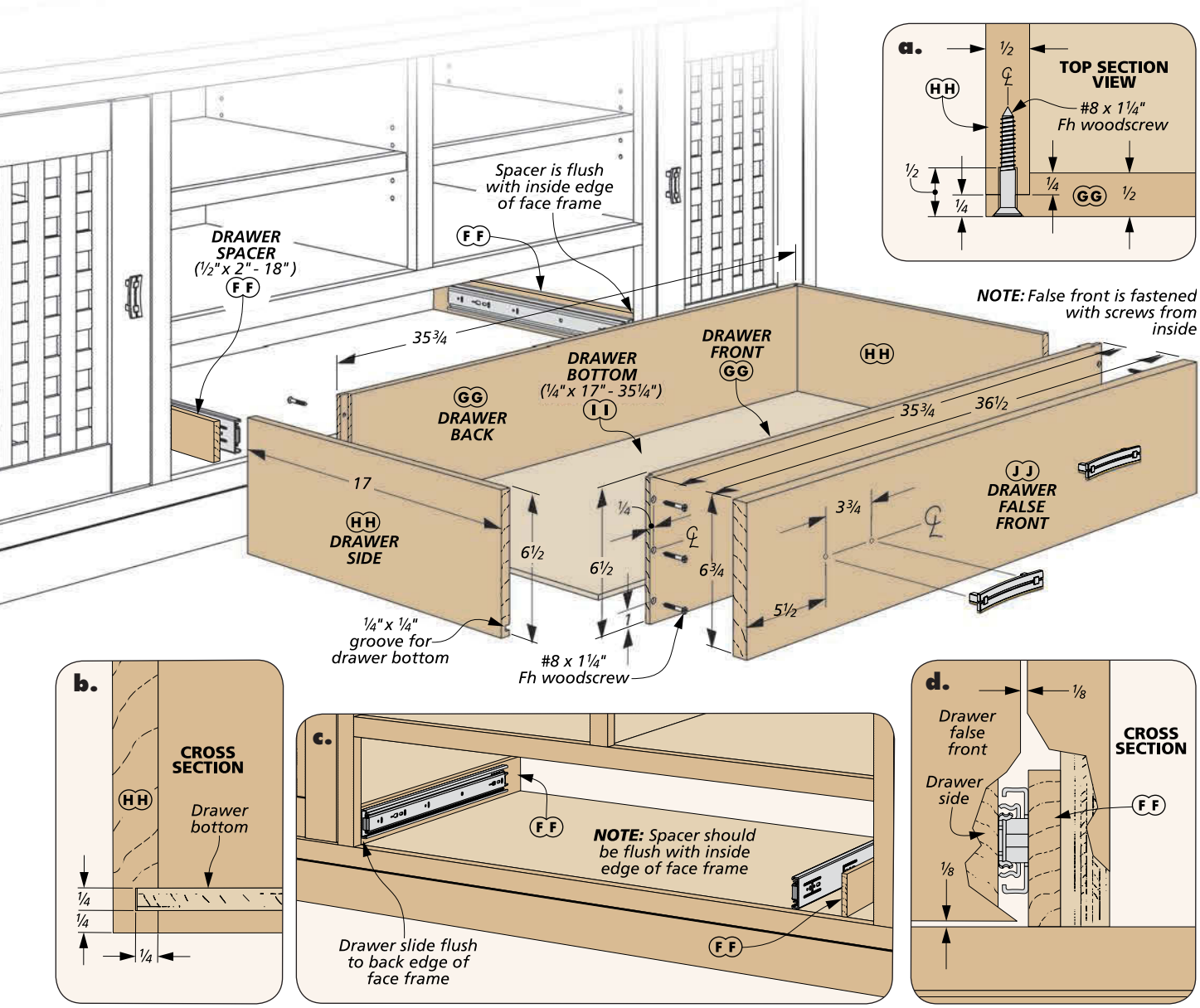

adding the Drawer & Back

The last two things to do are build the drawer and make the plywood back panel. The drawer fits in the lower, center opening in the case. It's made with simple, rabbeted joints and finished off with a false front. You'll build the drawer first, then you can install the metal slides.

A SIMPLE BOX. To start on the drawer, I cut the front, back, and two side pieces to final size. Then you can cut a rabbet on the ends of the front and back pieces (drawing above).

The next thing to do is cut a groove on the inside face of all four pieces to hold the drawer bottom. After cutting the ¼" plywood bottom to size, you can glue and screw the drawer box together, making sure that everything stays square.

SPACERS. There's just one more thing you need to do before you can install the metal drawer slides in the case. I couldn't mount the metal drawer slides directly onto the sides of the case because the face frame overhangs the drawer opening.

To get around this problem, I made spacers to fit on the sides of the opening, flush with the edge of the face frame (detail 'd' below). They allow the metal slides to open fully without being obstructed by the face frame. Once the spacers and slides are in place, you're ready to work on the drawer false front.

FALSE FRONT. The false front couldn't be any simpler. It's just a piece of hardwood sized to fit the opening. The only tricky part is getting it sized so that there's an even ⅛" reveal all around. Then it's just a matter of fastening it to the front of the drawer box.

To mount the false front, I first put some carpet tape on the front of the drawer box. Then you can take some time to carefully position the false drawer front in the opening. You'll press firmly until the tape "grabs." Once the false front is in position, fasten it in place with screws from the inside of the drawer.

BACK PANEL. The last piece you'll need to add is the back panel. This is made

from ¼" plywood. The openings you see in the drawing at right provide access to all the cables for electronic components. But more importantly, they provide ventilation to prevent heat build-up. The Online Extra article shows how I cut clean, smooth openings. Then I mounted the back panel to the case using wire brads around the edge (detail 'a').

After going over the entire project with some sandpaper, you can think about the finish.

FINISHING UP. I decided to use a "two-tone" finish for this project. I chose a dark stain for the top and base. A natural tung oil finish on the case contrasts with the dark stain and adds a nice, warm tone.

To make the task of applying the stain easier, I removed the top and base from the case before applying the stain to those pieces. The case, shelves, and drawer front were rubbed with a couple coats of tung oil. Then you can reassemble everything and apply a clear lacquer finish for a layer of protection.

Finally, you can move the cabinet into your favorite room to show it off to friends and family. After you install the shelves and all your electronic equipment, just sit back, relax, and enjoy the show.

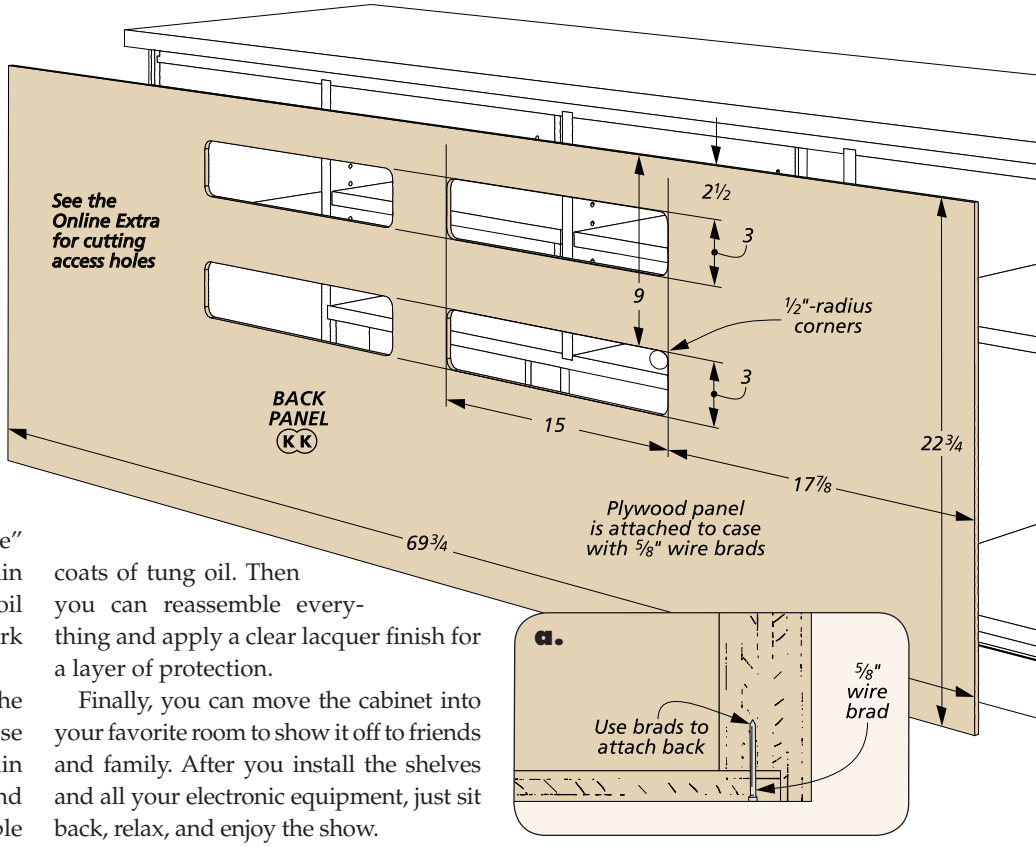

MATERIALS, SUPPLIES & CUTTING DIAGRAM

A	Case Top (1)	¾ ply. - 18 x 69¼
B	Case Bottom (1)	¾ ply. - 18 x 69¼
C	Case Sides (2)	¾ ply. - 18¼ x 22¾
D	Vert. Partitions (2)	¾ ply. - 18 x 21¼
E	Center Partition (1)	¾ ply. - 18 x 13
F	Hor. Divider (1)	¾ ply. - 18 x 38¼
G	Long Filler Strips (2)	½ x 2 - 68¾
H	Short Filler Strips (2)	½ x 2 - 14
I	End Face Frames (2)	¾ x 1¼ - 22¾
J	Top/Bot. Face Frames (2)	¾ x 1¼ - 67¾
K	Ver. Face Frames (2)	¾ x 1¼ - 20¼
L	Hor. Face Frame (1)	¾ x 1¼ - 36¾
M	Center Face Frame (1)	¾ x 1¼ - 12
N	Corner Block (8)	⅞ x 3⅞ - 4⅛
O	Long Base Rails (2)	¾ x 2¾ - 62½
P	Short Base Rails (2)	¾ x 2¾ - 11¼
Q	Long Cleats (2)	1 x 1 - 68½
R	Short Cleats (2)	1 x 1 - 6
S	Center Shelves (2)	¾ ply. - 17 x 18¼
T	End Shelves (2)	¾ ply. - 17 x 14½
U	Center Shelf Edging (2)	¾ x ¾ - 18¼
V	End Shelf Edging (2)	¾ x ¾ - 14½
W	Top (1)	1 x 20 - 75
X	Door Rails (4)	¾ x 2½ - 10
Y	Door Stiles (4)	⅞ x 2½ - 20
Z	Vertical End Lattice (4)	¼ x 1½ - 16
AA	Vertical Lattice (6)	¼ x 1 - 16
BB	Horizontal End Lattice (4)	¼ x 1½ - 10
CC	Horizontal Lattice (12)	¼ x 1 - 10
DD	Hinge Blocks (4)	½ x 3½ - 4
EE	Door Stops (2)	¾ x 1¼ - 2½
FF	Drawer Spacers (2)	½ x 2 - 18
GG	Drw. Front/Back (2)	½ x 6½ - 35¾
HH	Drawer Sides (2)	½ x 6½ - 17
II	Drawer Bottom (1)	¼ ply. - 17 x 35¼
JJ	False Front (1)	¾ x 6¾ - 36½
KK	Back Panel (1)	¼ ply. - 22¾ x 69¾

- (2) 32mm Door Pulls
- (2) 96mm Drawer Pulls
- (1 pr.) 16" Full-Ext. Drawer Slides
- (2 pr.) Full Inset Hinges
- (16) ¼" Nickel Shelf Support Pins
- (16) #7 x 1¼" Pocket Hole Screws
- (6) #8 x 1¼" Fh Woodscrews
- (34) #8 x 1½" Fh Woodscrews
- (18) #8 x 2" Fh Woodscrews
- (1 pkg.) ⅝" Wire Brads

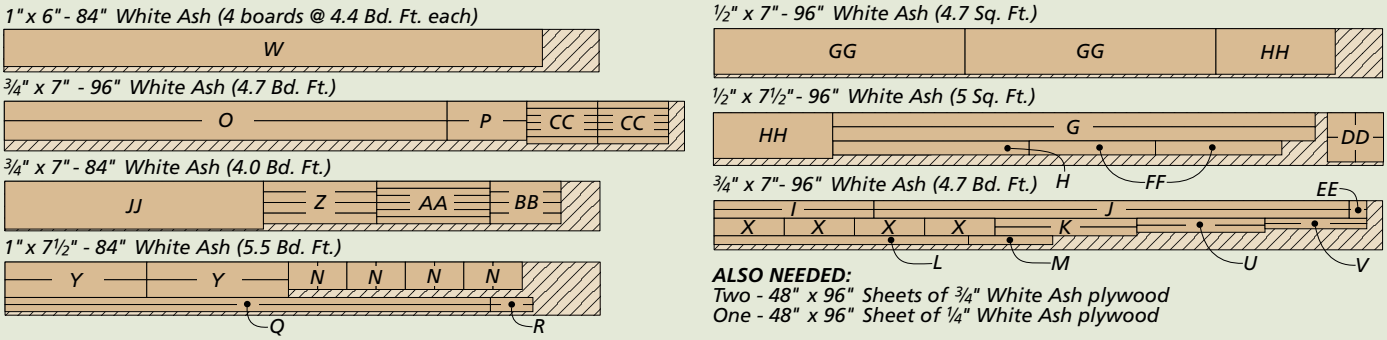

ALSO NEEDED:
Two - 48" x 96" Sheets of ¾" White Ash plywood
One - 48" x 96" Sheet of ¼" White Ash plywood

contoured Keepsake Box

Great-looking veneer and hardwood, plus a few interesting woodworking techniques add up to a memorable project.

A keepsake box is something that just about everyone appreciates. And an elegant design like the one shown above is suitable for any occasion. On top of that, you can enjoy trying out a few interesting woodworking techniques that go into making the box.

Splined miters and contoured sides are the focal points of the basic box. The hinged lid not only has an interesting profile, but it features a veneered center panel trimmed with thin, inlaid banding. I used an easy and reliable method to veneer the panel without using an expensive vacuum press or any special tools.

The best thing about this project is that you can find most of the material you'll need in the scrap bin. Any hardwood will do just fine. (I chose mahogany.) You can change the look of the box by choosing matching material for the splines, or use a contrasting wood, like I did. And since it only requires a small piece of veneer, you can look for an interesting piece without spending a fortune.

It's hard to imagine a better way to spend your shop time.

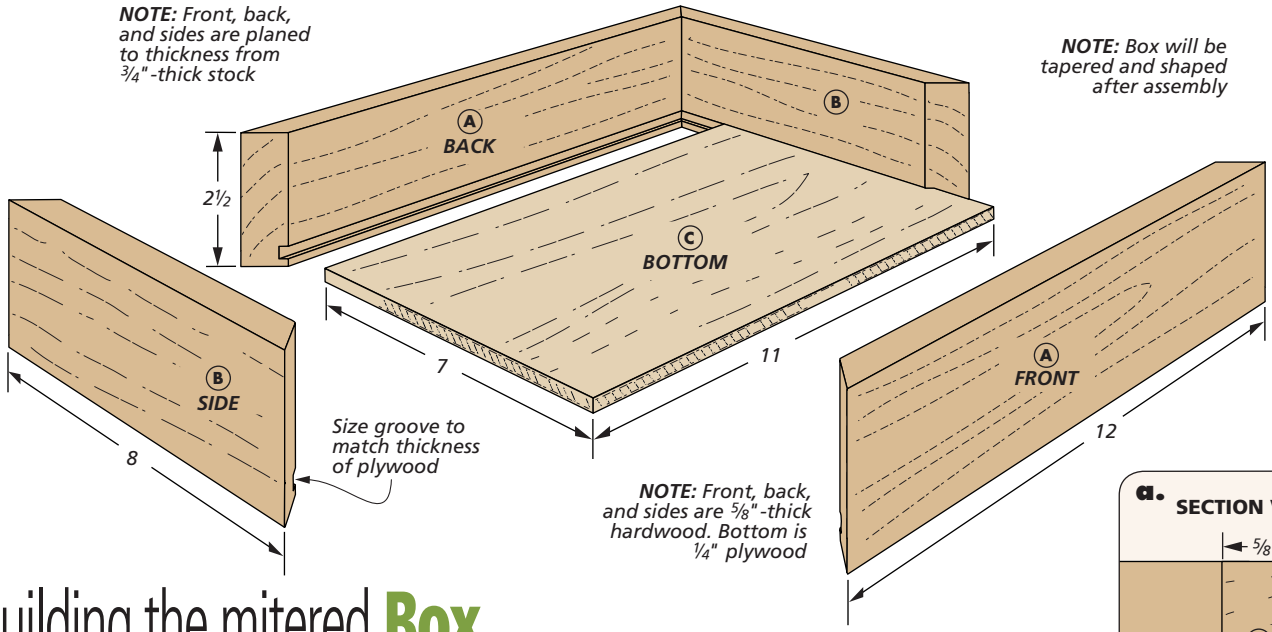

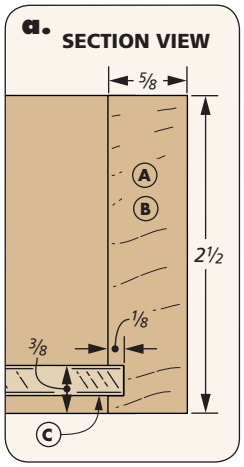

building the mitered **Box**

In spite of the contoured finished appearance of the keepsake box, it begins as a very straightforward, rectangular assembly. Later, you'll add splines in the corners and taper the outside.

MILL THE STOCK. The front, back, and sides of the box are all ⅝" thick. So I started by planing some ¾"-thick stock to this thickness. Then I cut the pieces to final width and rough length.

GROOVE. The box below shows how I used a standard blade to cut the groove for the bottom. By moving the rip fence slightly between passes you can sneak up on the correct width to match the thickness of the plywood.

CUTTING PERFECT MITERS. Since you'll shape the sides of the box, it's very important that the miter joints are as close to perfect as possible.

You can start by tilting the saw blade 45°. Here, you'll want to take the time to set this angle accurately. Then attach an auxiliary fence to the miter gauge. The auxiliary fence backs up the cut, and stops it from tearing out on the back side. I also attached adhesive-backed sandpaper to the fence to prevent the workpiece from slipping during the cut.

Now you can cut one end of each piece. The right drawing below shows how I used a stop block to keep the length of opposite sides exactly the same. This step is critical to assembling tight miter joints.

ASSEMBLY TIME. To assemble the box, lay out all four pieces against a straightedge with their inside faces down and tape across each joint. Then, cut the plywood bottom and dry fit the assembly. Finally, add glue to the miters, insert the bottom in the groove, and bring the pieces together, taping the final corner.

How-To: Prepare the Front, Back & Sides

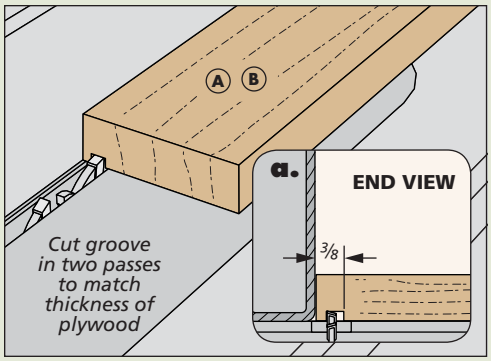

Groove. First, cut the upper edge of the groove. Then bump the rip fence in to sneak up on a good fit for the bottom.

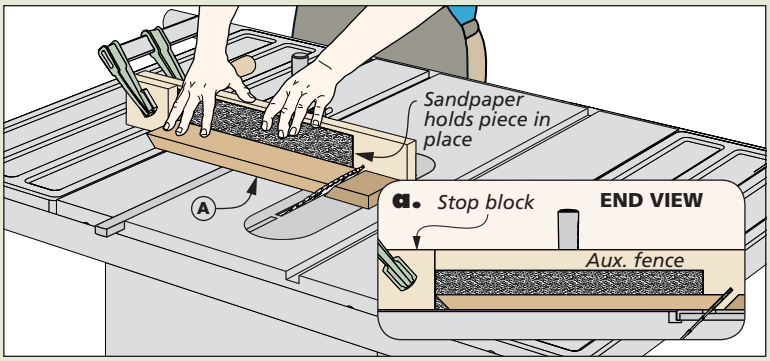

Miter to Length. With an auxiliary fence on the miter gauge and the blade set to 45°, start by cutting one end of each workpiece. Then set up a stop block to cut the opposite end to final length.

GO Online Extras

For information on making the slot-cutting jig, go to: WoodsmithSpecials.com

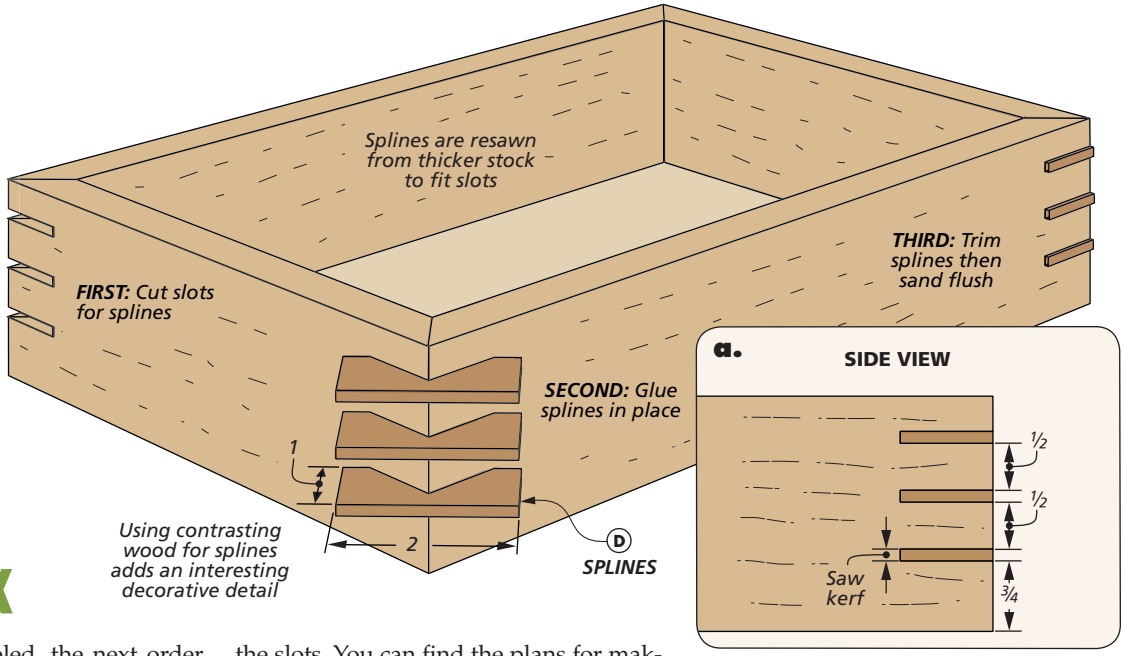

completing the Box

With the box assembled, the next order of business is to cut slots in the corners and add the splines. As you can see in the box below, I use a simple, shop-made jig to hold the box at the proper angle to cut the slots. You can find the plans for making the jig at *WoodsmithSpecials.com*.

CUT THE SLOTS. Using the jig is a reliable way to accurately cut the slots. But there are a couple of things to set up first.

Start by setting the blade height to cut through the jig to the correct depth on the corners. You can see what I mean in detail 'b' above. Make test cuts through the jig and measure the blade height to get it set properly. Since the jig rides against the rip fence, all you need to do is set the fence to the correct spacing for each slot. Detail 'a' shows the positions of the slots.

MAKE THE SPLINES. The center drawing below shows an easy way to cut splines from a piece of contrasting stock. (I used walnut.) Plane or sand the splines for a snug fit. They should not be so tight they need to be pounded in place. After applying glue, I used a piece of scrap with beveled edges as a clamping aid, as you see in the margin photo at left.

Spline Clamping Aids. The corner block makes it possible to clamp the splines securely in position without shifting.

How-To: Create Slots & Splines

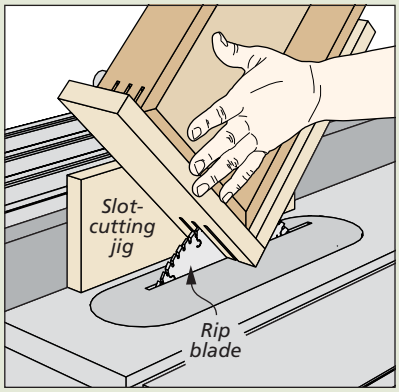

Cutting the Spline Slots. Hold the box firmly in position in the jig as you cut the slots for the splines.

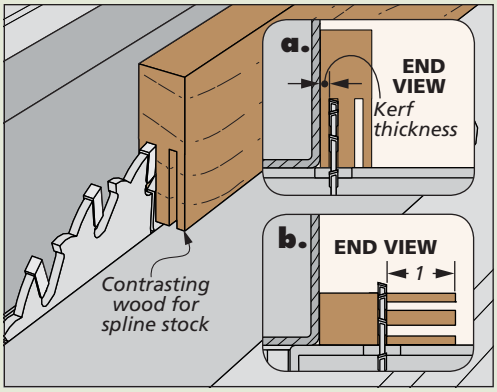

Ripping Spline Stock. Set the rip fence and cut (detail 'a'), then flip the workpiece over and repeat. Cut the splines free as in detail 'b.'

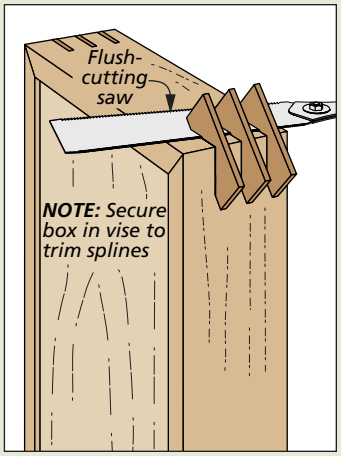

Trimming. Using a flush-cutting saw, carefully trim the waste to avoid breaking off the splines.

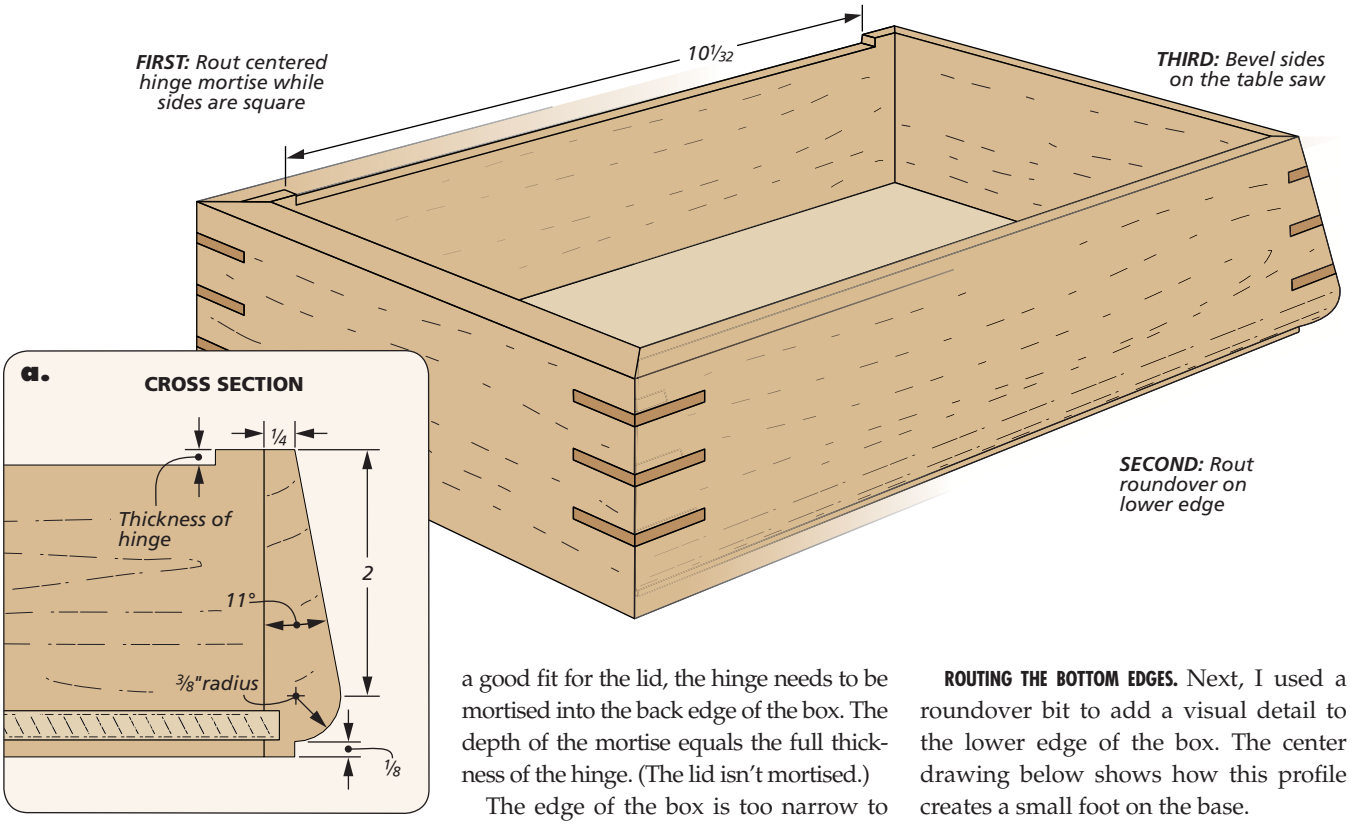

A flush-cutting saw makes short work of trimming waste from the splines. Then, a little sanding is all it takes to smooth out the sides of the box. And since subsequent operations rely on the sides riding against the fence on the table saw and router table, having the sides flat is important for getting consistent, even cuts.

HINGE MORTISE. The lid is connected to the box with a continuous (piano) hinge. To get a good fit for the lid, the hinge needs to be mortised into the back edge of the box. The depth of the mortise equals the full thickness of the hinge. (The lid isn't mortised.)

The edge of the box is too narrow to support the router during this cut. And there's a risk of tearout if you try this on the router table. I came up with an easier plan to rout the mortise.

I simply sandwiched the back of the box between a couple of support blocks. With the blocks taped in place, there's plenty of surface area to safely rout away most of the waste for the hinge mortise (left drawing, below). Then I squared up the ends of the mortise with a chisel.

ROUTING THE BOTTOM EDGES. Next, I used a roundover bit to add a visual detail to the lower edge of the box. The center drawing below shows how this profile creates a small foot on the base.

BEVELING THE SIDES. The beveled sides provide a very distinctive look for the box. The bevel also gives the illusion that the splines are each a different size. You can safely make this bevel cut by installing a rip blade and tilting the blade 11°. The right drawing below has the details.

It's not unusual to get a little bit of burning here, so be sure to use a sharp, clean blade. A little sanding work will clean up the saw marks.

Shape the Box

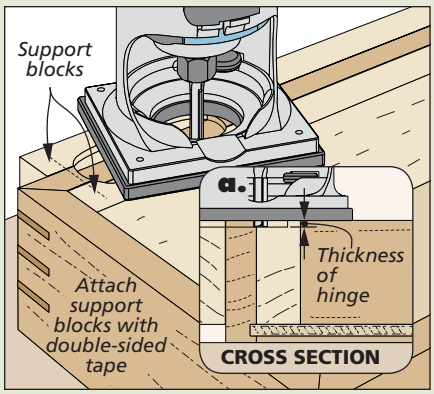

Hinge Mortise. By taping support blocks to both sides of the back, routing the hinge mortise is a breeze.

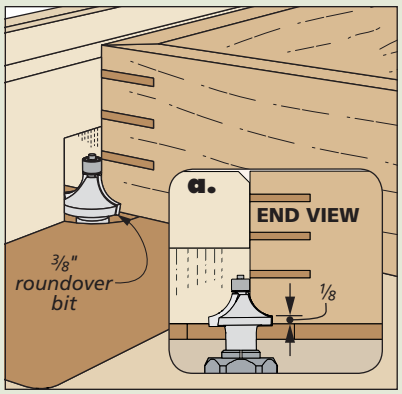

Rout. Using a roundover bit, rout the bottom edges. By making multiple, shallow passes you'll get a clean profile.

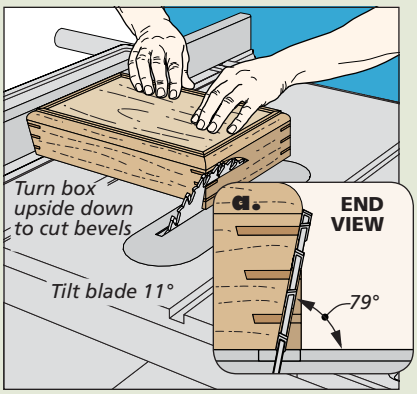

Beveling the Sides. With the box upside-down on the table saw, sight down the edge to set the fence.

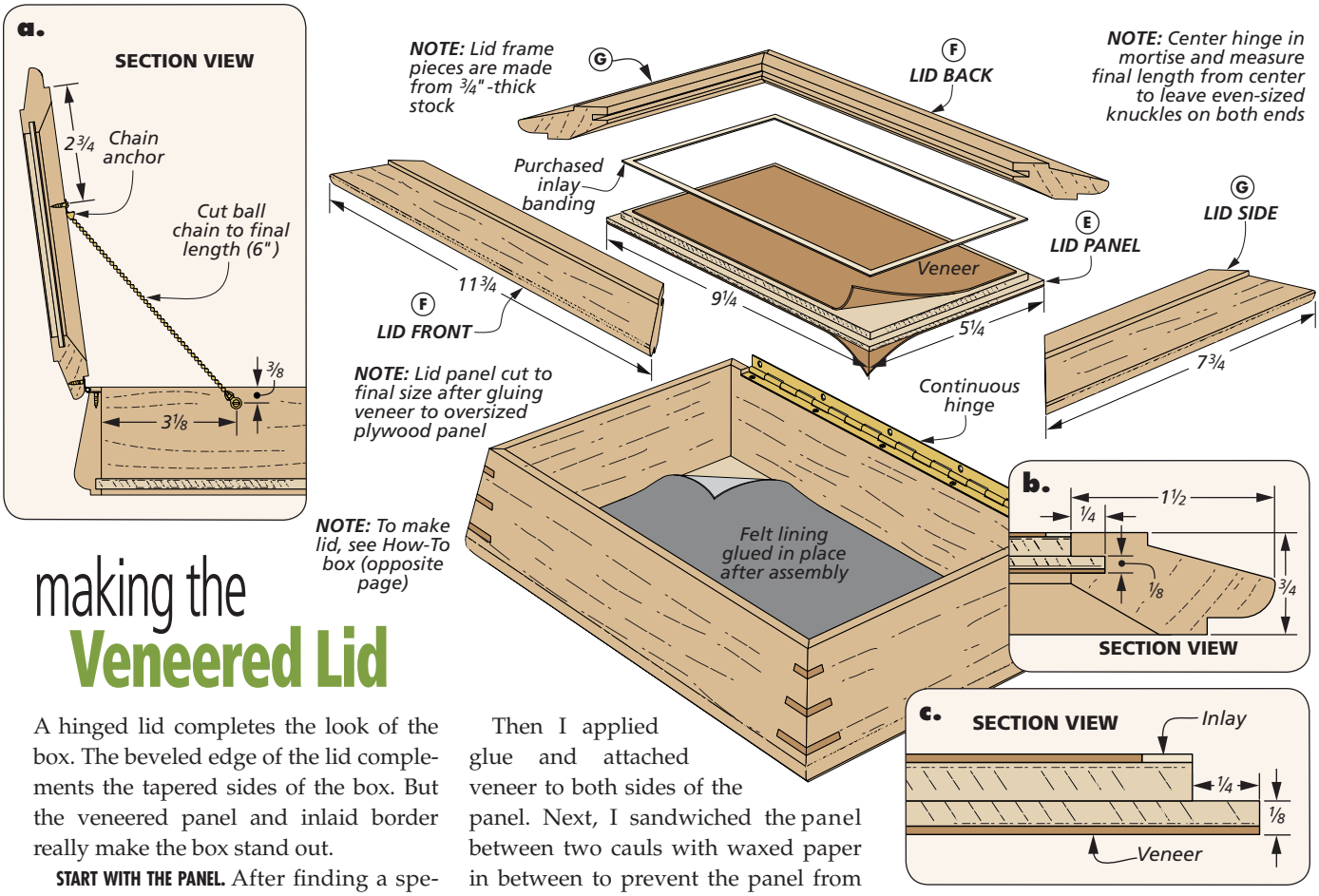

making the Veneered Lid

A hinged lid completes the look of the box. The beveled edge of the lid complements the tapered sides of the box. But the veneered panel and inlaid border really make the box stand out.

START WITH THE PANEL. After finding a special piece of figured veneer, I prepared a slightly oversize plywood panel to use as a substrate. Since this is a very small panel, you can glue the veneer to the substrate using only clamps and some cauls. The cauls are just a couple of ¾"-thick flat panels slightly larger than the lid panel.

Then I applied glue and attached veneer to both sides of the panel. Next, I sandwiched the panel between two cauls with waxed paper in between to prevent the panel from sticking to the cauls. Now, just place several clamps around the assembly.

For this kind of glueup, I like to let the panel stay under clamping pressure longer than normal to ensure a good bond. So after letting the glue set up overnight, remove it from the clamps and cauls and trim it to size.

RABBET & RECESS. As you can see in detail 'c' above, you'll need to rabbet the edges of the panel to fit into the frame. In addition, you'll also need to cut a shallow recess for the inlay banding. Then glue the banding in place in the shallow groove. The box below shows all three operations.

How-To: Create the Veneered Lid & Inlay

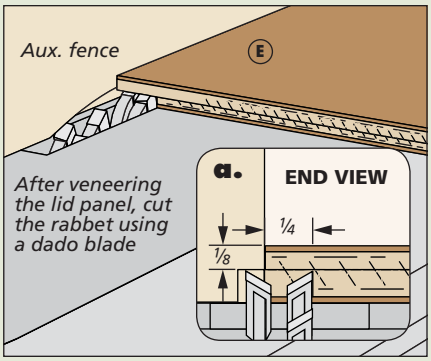

Rabbet. With an auxiliary fence installed, bury the dado blade and cut the rabbet on the outside edges of the panel.

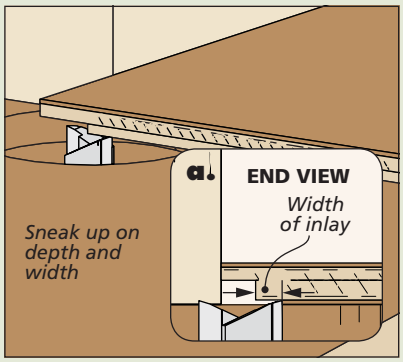

Rout Channel for Inlay. Using a straight bit, rout the very shallow channel to hold the narrow inlay banding.

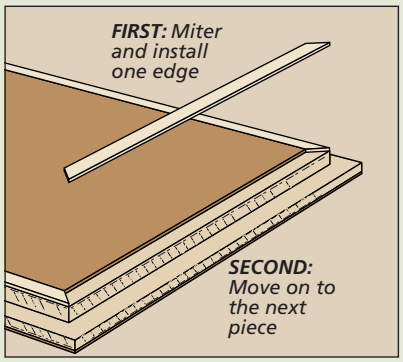

Install the Inlay. Fit each piece of inlay one at a time, mitering the corners with a sharp chisel or plane iron.

LID FRAME. To hold the veneered panel, I made a mitered frame. Of course, it will become the lid of the box, but you'll go through the same sort of process as you would for making a picture frame. The step-by-step instructions at right break down what looks to be a complicated task into easier, single cuts.

After selecting the stock and milling it to final size, head over to the table saw and cut a groove to fit the tongue on the panel. Then tilt the saw blade 30° and cut the bevel on the lower inside edge, as shown in Step 2.

ASSEMBLY. At this point, you can miter the frame pieces using the same techniques as before. Then, install the panel and assemble the frame. The remaining steps to create the profile are completed after assembly.

COMPLETING THE PROFILE. Now, cut the shallow notch shown in Step 3 to create the shoulder of the "raised panel" profile. The final bevel cut (Step 4) should just meet the edge of the notch, as shown in the detail.

In the final two steps, you'll rout a shallow rabbet on the underside of the frame and round over the edge, as well. The rabbet you rout in Step 5 creates a lip for the lid to rest on the upper edge of the box. After completing the rabbet, install a roundover bit and rout the profile to soften the appearance of the lid (Step 6).

FINAL DETAILS. By now, you've got a good fit for the lid. There are just a few final details to complete.

After cutting the hinge to length with a hacksaw, I used double-sided tape to hold it in position while installing the screws. Now you can apply your favorite finish to the box before you install the chain and anchors, as you see in detail 'a' on the opposite page. Finally, glue a felt lining in the bottom of the box.

The result of your effort is sure to gain a prominent spot in the home and a lot of admiration from your friends and family.

How-To: Make the Lid Frame

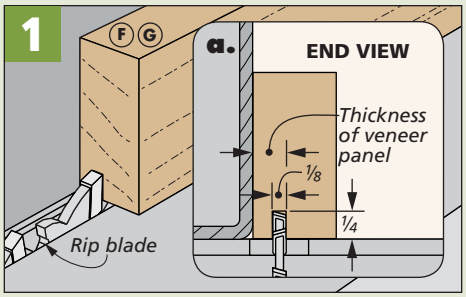

Groove. With a rip blade installed, cut the shallow groove that will hold the veneered top panel in the frame.

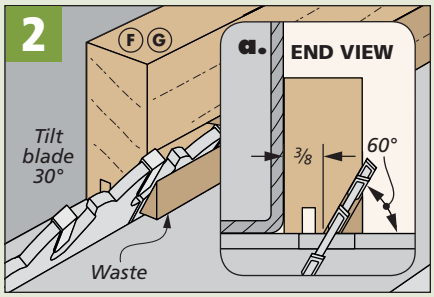

Inside Bevel. The next step is to tilt the blade 30° and cut the bevel on the inside edge of each of the frame pieces.

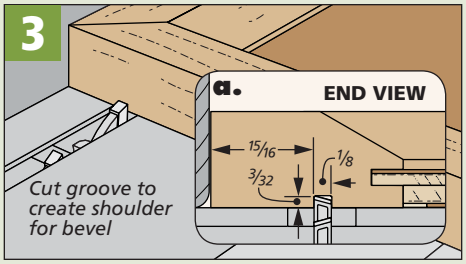

Shoulder. After assembling the frame, cut a very shallow groove that will define the border of the frame's top.

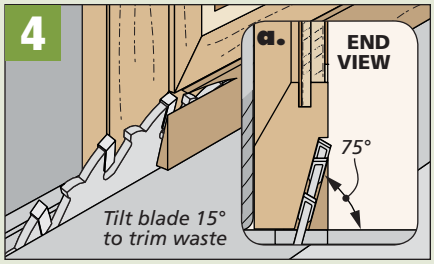

Outside Bevel. As you did earlier on the box sides, carefully sight the edge of the saw blade to meet the shoulder.

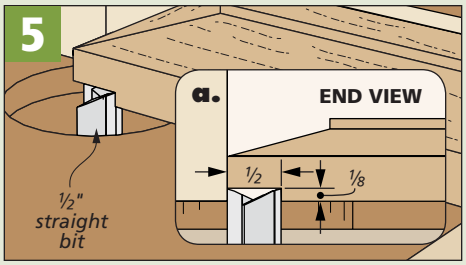

Rout the Lip. With a straight bit installed in the router table, rout the rabbets to form the bottom lip of the lid.

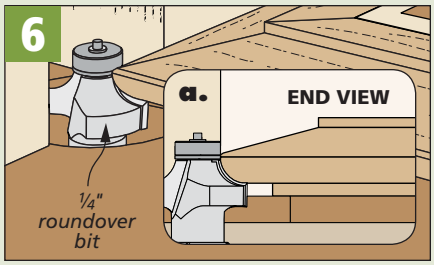

Round Over the Edge. Complete the profile of the frame by adding the roundover to soften the look of the lower edge.

MATERIALS, SUPPLIES & CUTTING DIAGRAM

A	Front/Back (2)	5/8 x 2 1/2 - 12
B	Sides (2)	5/8 x 2 1/2 - 8
C	Bottom (1)	1/4 ply. - 7 x 11
D	Splines (12)	1/8 x 1 - 2
E	Lid Panel (1)	1/4 ply. - 5 1/4 x 9 1/4
F	Lid Front/Back (2)	3/4 x 1 1/2 - 11 3/4
G	Lid Sides (2)	3/4 x 1 1/2 - 7 3/4

- (1) 16mm x 780mm Continuous Brass Hinge
- (10) #1 x 3/8" Fh Brass Woodscrews
- (1) #3 Ball Chain
- (2) #3 Chain End Anchors
- (2) #4 x 3/8" Rh Brass Screws
- (1) 6 3/4" x 10 3/4" Felt
- (2) 6" x 12" Veneer
- (1) 36" Inlay Banding

1/4" Birch plywood 12" x 24"

3/4" x 5" - 48" Mahogany (1.7 Bd. Ft.)

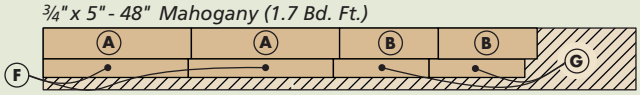

ALSO NEEDED: *Contrasting wood for splines*

IOWA
POEMS

home Storage

Having a place to put everything in your home is essential. With these storage options, you can highlight your woodworking skills and create projects that will keep you organized.

LIGHTED DISPLAY CABINET 60

MUDROOM STORAGE BENCH 66

DROP-FRONT STORAGE CENTER ...74

lighted Display Cabinet

Stylish glass doors and interior lighting put the contents on display, but the design and construction of this cabinet holds a few surprises of their own.

This lighted display cabinet can be the perfect accent piece for just about any room in the house. The beveled glass doors and shelf allow you to display your collectibles to full advantage. And the small scale of the cabinet means it will fit in almost any space.

But from a woodworking perspective, when you look at it you're probably thinking about the mortise and tenon joinery and an expensive hardwood used for its construction. You might be surprised to learn that this project relies on simple, but strong pocket-hole joinery. This means it's quick and easy to build. And the expensive-looking wood is simply poplar stained with a blend of gel stains.

All these elements combine to give you a great-looking project that's both easy to build and relatively inexpensive. The best of both worlds!

Construction Details

OVERALL DIMENSIONS:
34"W x 32"H x 13"D

Top conceals pocket screw holes and wiring channels

***NOTE:** Underside of top is beveled on three edges*

Routed channel holds wiring for recessed lights

Pocket-hole joinery used for case and base construction

Interior lights are recessed in shallow holes in case top

Rabbets in cabinet sides hold plywood back

Beveled glass panels allow clear view of items inside cabinet

Shelf pins in sleeves allow easy adjustment of glass shelf

Cabinet doors assembled with easy-to-cut half-lap joinery

Euro-style concealed hinges make fitting inset doors a breeze

Stout legs provide a solid base for the cabinet

Screws connect base to the cabinet case

Curved rails on base add decorative detail

CUTTING DIAGRAM

1"x 7½"- 96" Poplar (Two boards @ 6.3 Bd. Ft. each)

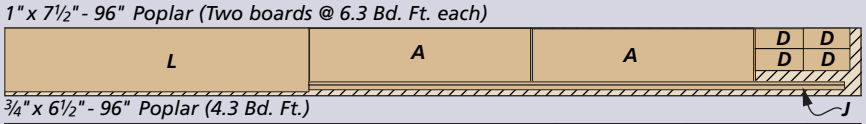

¾"x 6½"- 96" Poplar (4.3 Bd. Ft.)

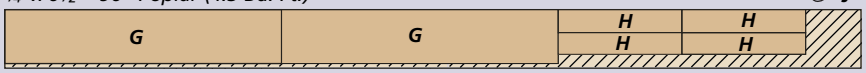

¾"x 6"- 96" Poplar (4 Bd. Ft.)

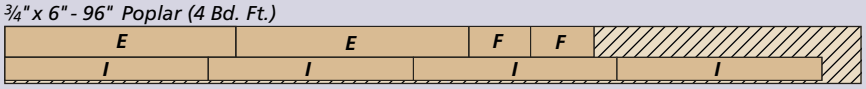

1"x 6"- 96" Poplar (5 Bd. Ft.)

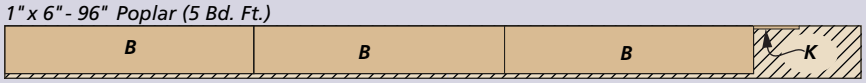

1"x 6"- 36" Poplar (1.9 Bd. Ft.)

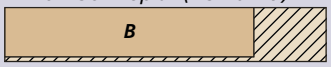

Also needed: One 48"x 48" sheet ¼" Birch plywood

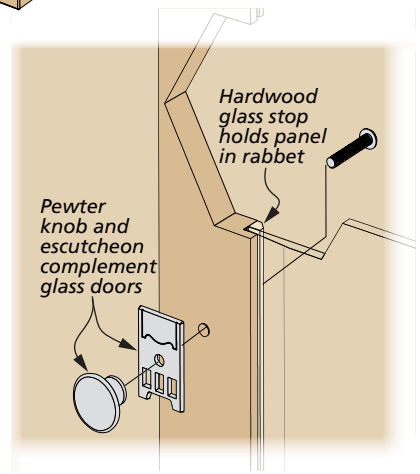

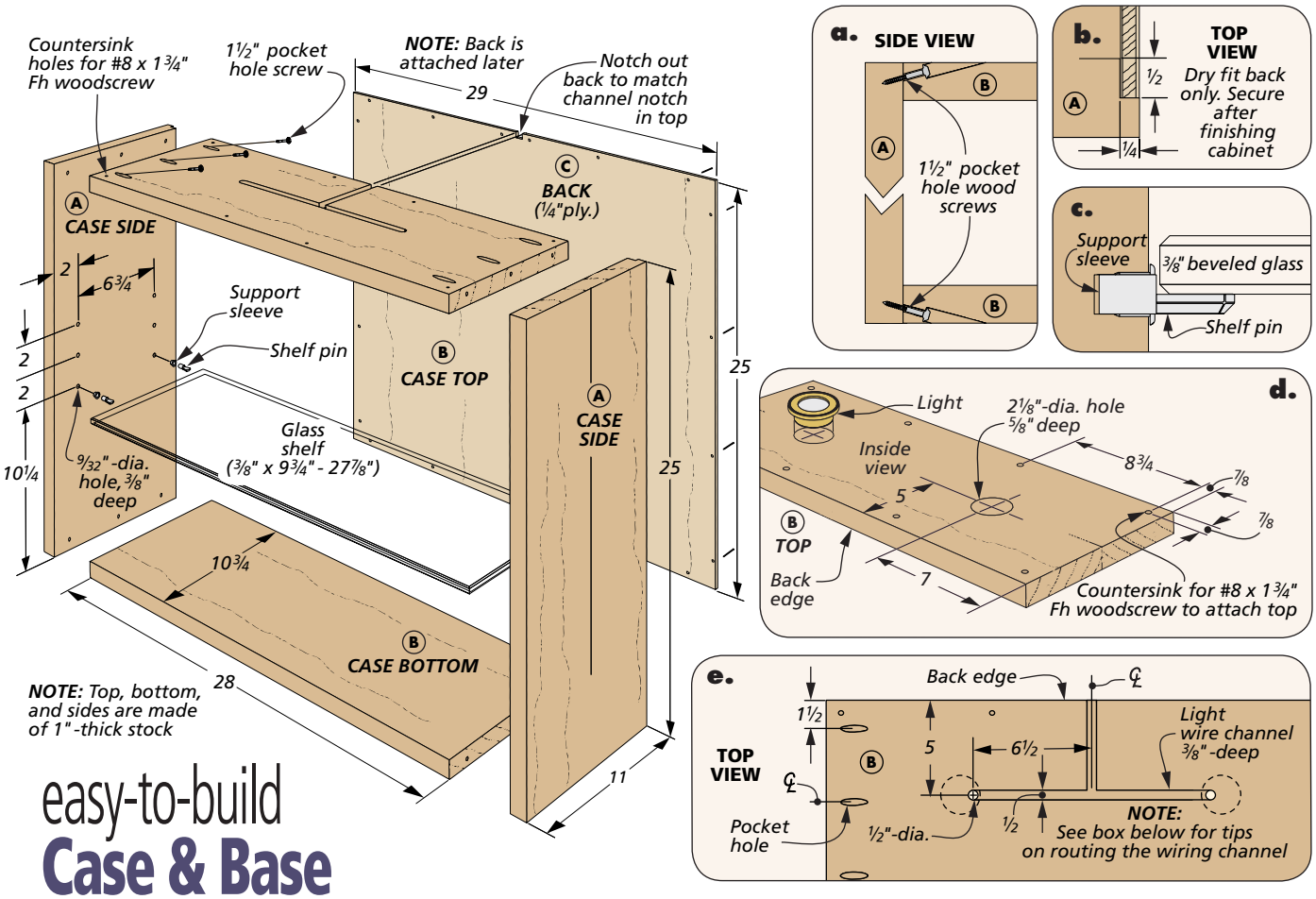

easy-to-build Case & Base

Like most cabinets, this project begins with a solid case. And since the case relies on pocket-hole joinery, making it couldn't be easier.

As I said earlier, I used poplar for this cabinet. And you might find boards wide enough for the top, bottom, and sides of the case at your lumberyard. But I chose to glue-up narrower stock instead. The glued-up panels are less likely to cup with changes in temperature and humidity.

THE SIDES. After cutting the sides to final size, I added a rabbet on the back edge of each piece to hold the ¼" plywood back panel. With a dado blade installed in the table saw, cutting the ¼" x ½" rabbet is pretty straightforward (detail 'b').

To complete the sides, you'll need to drill the shelf-pin holes. I just marked the locations as shown in the main drawing above and drilled these holes at my drill press.

TOP & BOTTOM. Now it's time to work on the top and bottom. Note that they're not the same width as the sides. Both pieces are ¼" narrower than the sides to allow for the addition of the plywood back.

The top and bottom have pocket holes drilled on each end to join them

How-To: Install Recessed Lights

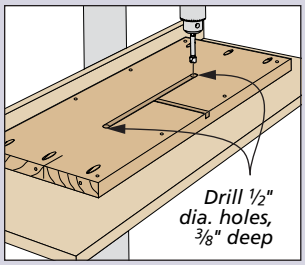

Drill End Holes. After laying out the channel for the wiring, drill a hole at each end.

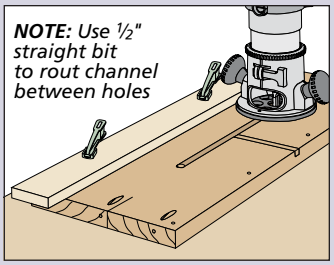

Rout the Channel. With a straightedge clamped to the top, rout the ⅜"-deep channel.

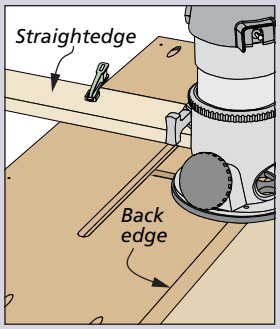

Exit Channel. Move the straightedge to rout the perpendicular exit channel.

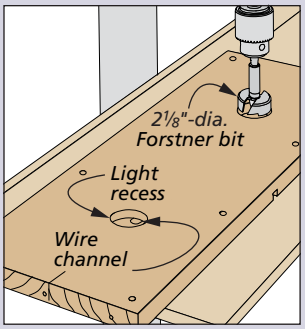

Drill Light Recess. Using a Forstner bit in the drill press, drill the recesses for the lights.

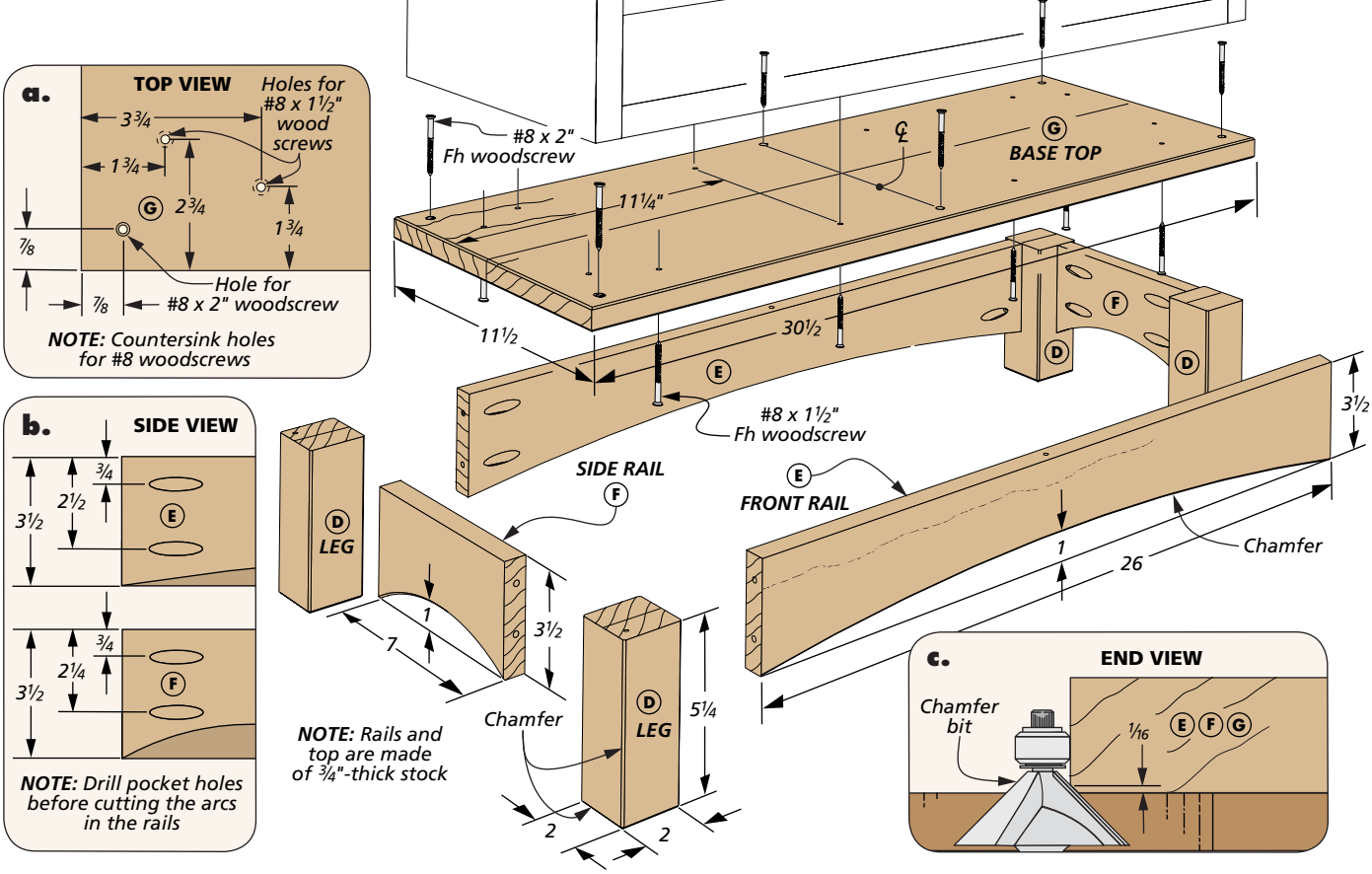

to the sides. The top also requires a little more work to create the recesses for the lights and rout a channel for the wiring (detail 'd'). The box at the bottom of the previous page shows an easy way to do this.

ASSEMBLY. Assembling the case with pocket hole screws is simple. I find it helpful to clamp the assembly together while driving the screws to keep the joints flush and square.

Finally, cut the plywood back to size and set it aside. Adding it later makes finishing the cabinet easier.

ADD THE BASE

After assembling the case, you're ready to get to work on the base. The front, back, and side rails connect to short legs to form a stable platform for the cabinet. A solid top fits over the base. The top makes it easy to connect the base to the case with screws.

START WITH THE LEGS. To get the 2" thickness necessary for the legs, I glued up two thinner pieces. Then, all you need to do is cut them to final size and add a 1/16" chamfer to the corners and bottom edges.

ADD THE RAILS. All four rails have an arc cut on the lower edge. But before you cut these arcs, it's a good idea to drill all the pocket holes first.

To cut the arcs in the rails, see the box below. You can smooth the edges using a sanding drum. Then, add a 1/16" chamfer to the bottom edge. Now you're ready to assemble the rails and legs with screws.

THE BASE TOP. To complete the base, you can cut the top to size and then drill the screw holes in the locations shown above. Once again, add a 1/16" chamfer to the top and bottom edges to match the rails. After fastening the top to the base, attach it to the case with screws.

Make the Curved Rails

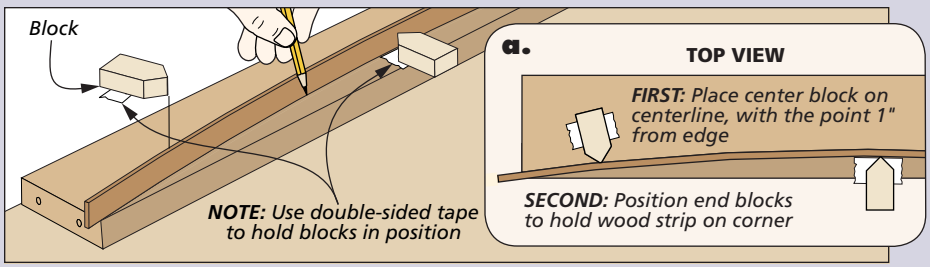

Lay Out the Arcs. To lay out the curve of the rails, start by attaching a block at the centerline, marking the highest point of the arc. Next, bend a thin strip of hardwood to the end point of the curve and add a block on each end. Now trace the curve with a pencil.

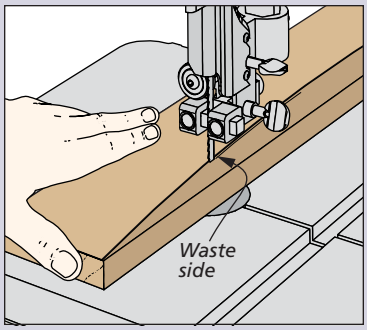

Cut the Rail. At the band saw, carefully cut the arc, making sure to stay on the waste side of the line.

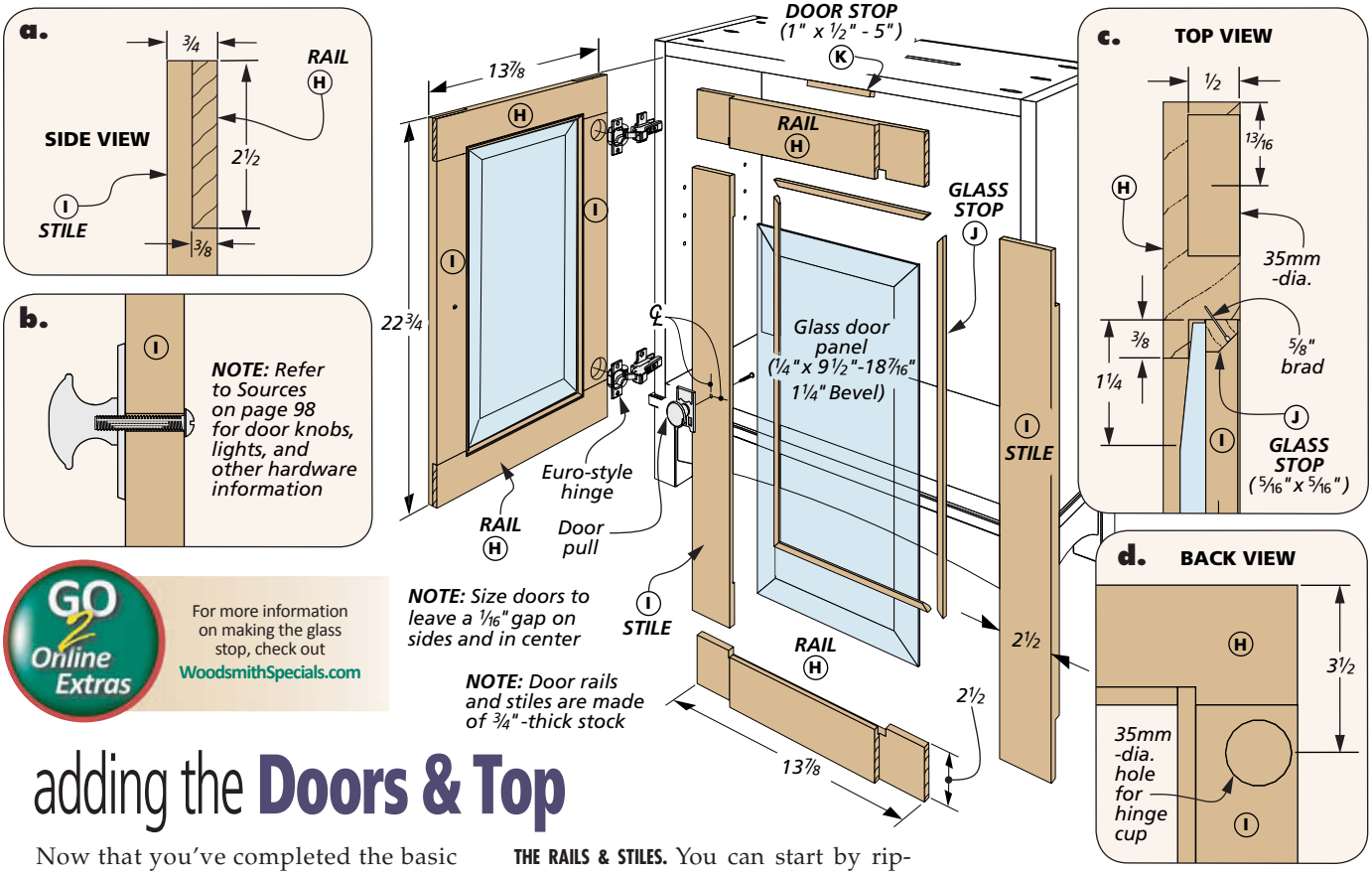

GO 2 Online Extras

For more information on making the glass stop, check out WoodsmithSpecials.com

adding the **Doors & Top**

Now that you've completed the basic case and attached the base, you're ready to move on to the doors. I used straightforward half-lap joinery for a couple of reasons — it's easy and reliable and it also provides plenty of strength to hold the heavy glass panels.

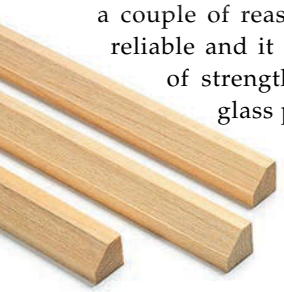

Glass Stop. To make the beveled glass stops, refer to the Online Extra page.

THE RAILS & STILES. You can start by ripping the rails and stiles to width and then cutting them to final length. Then, install a dado blade in the table saw and use a piece of scrap as a test piece to set the blade height to cut the half laps. The test piece allows you to sneak up on the perfect height.

THE DOORS. Another advantage of half-lap joinery is that the joints are self-squaring. In other words, if the cuts are square, using the technique shown in the box below will result in a square door frame. Large clamps pull the joints together while smaller clamps apply pressure directly to the glue surfaces of the half lap.

ROUT THE RABBETS. After the glue dries, scrape or sand the joints so the door will sit flat on your workbench. The next step is to rout the rabbets that will hold the glass panels in each door. The lower right illustration shows you an easy way to do this.

HINGE HOLES. Now it's time to drill the counterbores for the hinge cups at the

How-To: Assemble & Rout the Cabinet Door

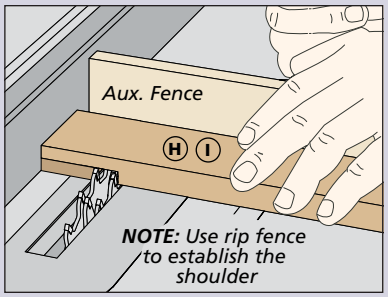

Cut the Half Laps. With a wide dado blade installed, use the miter gauge to support the workpiece for square cuts.

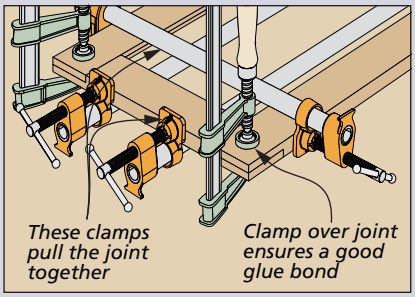

Proper Clamping Technique. Clamping pressure on the half laps and across the frame guarantees a tight assembly.

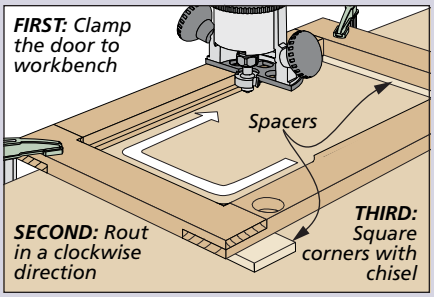

Rout the Rabbet. Use a rabbeting bit and rout in a clockwise direction to create the rabbet that will hold the glass.

locations shown above in details 'c' and 'd'. A Forstner bit works best here.

GLASS STOPS. After drilling the holes, you're ready to make the stops. They're just narrow hardwood strips beveled on one edge and mitered to fit in the frame. The beveled edge provides a flat surface to nail the brads into without damaging the glass.

The Online Extras has some helpful ideas for making the stops. After cutting the stops, it's a good idea to stain the doors before you install the glass.

HANG THE DOORS. With the glass in place, you can hang the doors. The Euro-style hinges make this an easy task. But first, cut out the small door stop and glue it in place (main drawing, opposite page). There's also the matter of attaching the door knobs. The main illustration and detail 'b' on the opposite page show you the position.

INSTALL THE LIGHTS. Before you can go much further, you'll need to install the lights. You've already prepared the case top to accept the lights and wiring, so the directions that come with the lights should help you finish this task.

PREPARE THE TOP. With the wiring out of the way, the next step is to make the beveled-edge top. The top covers up the wiring channels and the pocket holes used to assemble the case.

After cutting the top to final size, head to the table saw and set the blade angle at 15° to cut the bevel. A tall auxiliary fence helps make this cut easier and safer. I beveled the underside of the front and both sides. A good sanding to smooth the cut edges is all it takes to complete the top.

ATTACHING THE TOP. Since you might need access to the wiring and the lights at some point in the future, attach the top with screws only. I clamped the top in place to prevent it from sliding while I drilled screw holes from the inside of the case. Then keep the clamps in place while you add the screws.

A GEL STAIN FOR POPLAR. Poplar is seldom used as the primary wood in fine furniture. However, the right stain can make it look like a far more expensive choice.

To get the right color for this project, I used a mixture of equal parts "Georgian Cherry" and "Java" gel stain from *General Finishes*. You can find out where to get the stain and the hardware used on the cabinet in Sources, on page 98.

You'll find the gel stain even hides the green streaks often found in poplar. Save some scraps for sampling stain combinations I finished the cabinet with lacquer.

ADD THE BACK. The last thing to do is attach the back panel. It fits snugly in the rabbets on the sides. I used 5/8" brads spaced about every 6" all around the edges of the case. Now all you need to do is decide which room to put the cabinet in.

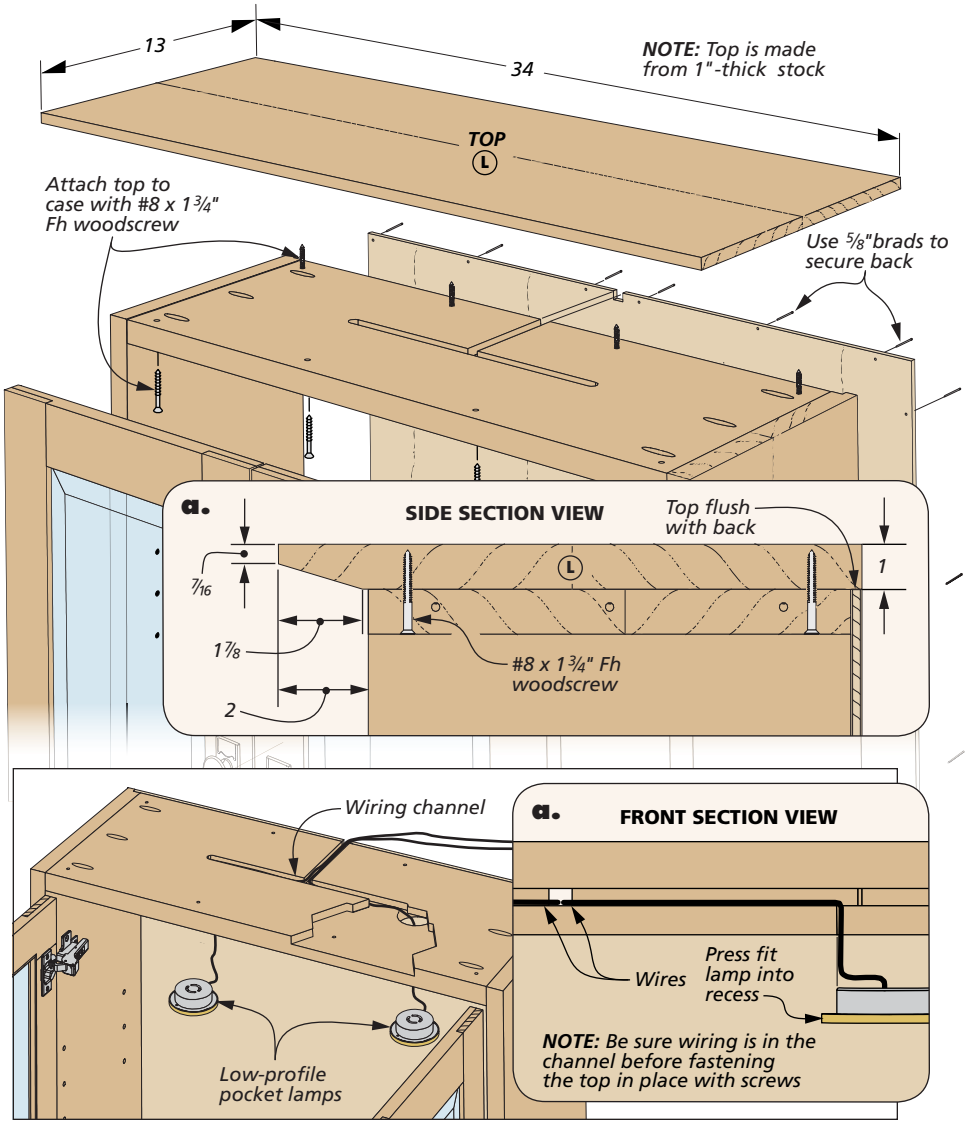

MATERIALS & SUPPLIES

A	Case Sides (2)	1 x 11 - 25	• (2) 1/4" Glass Panels (9 1/2" x 18 7/16")
B	Case Top/Bottom (2)	1 x 10 3/4 - 28	• (1) 3/8" Glass Panel (9 3/4" x 27 7/8")
C	Back (1)	1/4 ply. - 29 x 25	• (2) 1 7/8"-dia. Knobs w/ Escutcheons
D	Legs (4)	2 x 2 - 5 1/4	• (4) Euro Hinges w/ Screws
E	Base Front/Back Rails (2)	3/4 x 3 1/2 - 26	• (16) 1 1/4" Pocket Hole Screws
F	Base Side Rails (2)	3/4 x 3 1/2 - 7	• (12) 1 1/2" Pocket Hole Screws
G	Base Top (1)	3/4 x 11 1/2- 30 1/2	• (8) #8 x 1 1/2" Fh Woodscrews
H	Door Rails (4)	3/4 x 2 1/2- 13 7/8	• (8) #8 x 1 3/4" Fh Woodscrews
I	Door Stiles (4)	3/4 x 2 1/2- 22 3/4	• (6) #8 x 2" Fh Woodscrews
J	Glass Stop (2)	5/16 x 5/16 - 60	• (35) 5/8" Brads
K	Door Stop (1)	1 x 1/2 - 5	• (4) Shelf Pins w/Sleeves
L	Top (1)	1 x 13 - 34	• (1) Low-Profile Xenon Light Kit

mudroom Storage Bench

Baskets. Pull-out baskets are a great alternative to drawers. They help keep things in order (so nothing gets lost in the back) and provide a clean look.

This handy bench is a great project to try your hand at loose-tenon joinery.

A storage bench is a great addition to an entry hall or mud room. This design features three storage bays — plenty of room to stow away some clutter. To organize the space, I used inexpensive baskets from a housewares store. (It's a good idea to have the baskets in hand first. This allows you to build the bench to suit the baskets for a good fit.)

Since I wanted to paint this project, I used poplar and MDF for the bench. The hardwood top adds a nice contrasting detail, and ensures plenty of support.

The construction is pretty straightforward as well. I relied on loose-tenon joinery for the frame. The advantage of using this type of joint is that you don't have to worry about fitting each individual tenon to a particular mortise. You just use a shop-made router jig to rout perfectly sized mortises, accurately positioned on every workpiece. And because the mortises are all the same size, you can make all the tenons you'll need in just a few minutes at the router table and table saw.

Construction Details

OVERALL DIMENSIONS:
46½"W x 30¾"H x 18¾"D

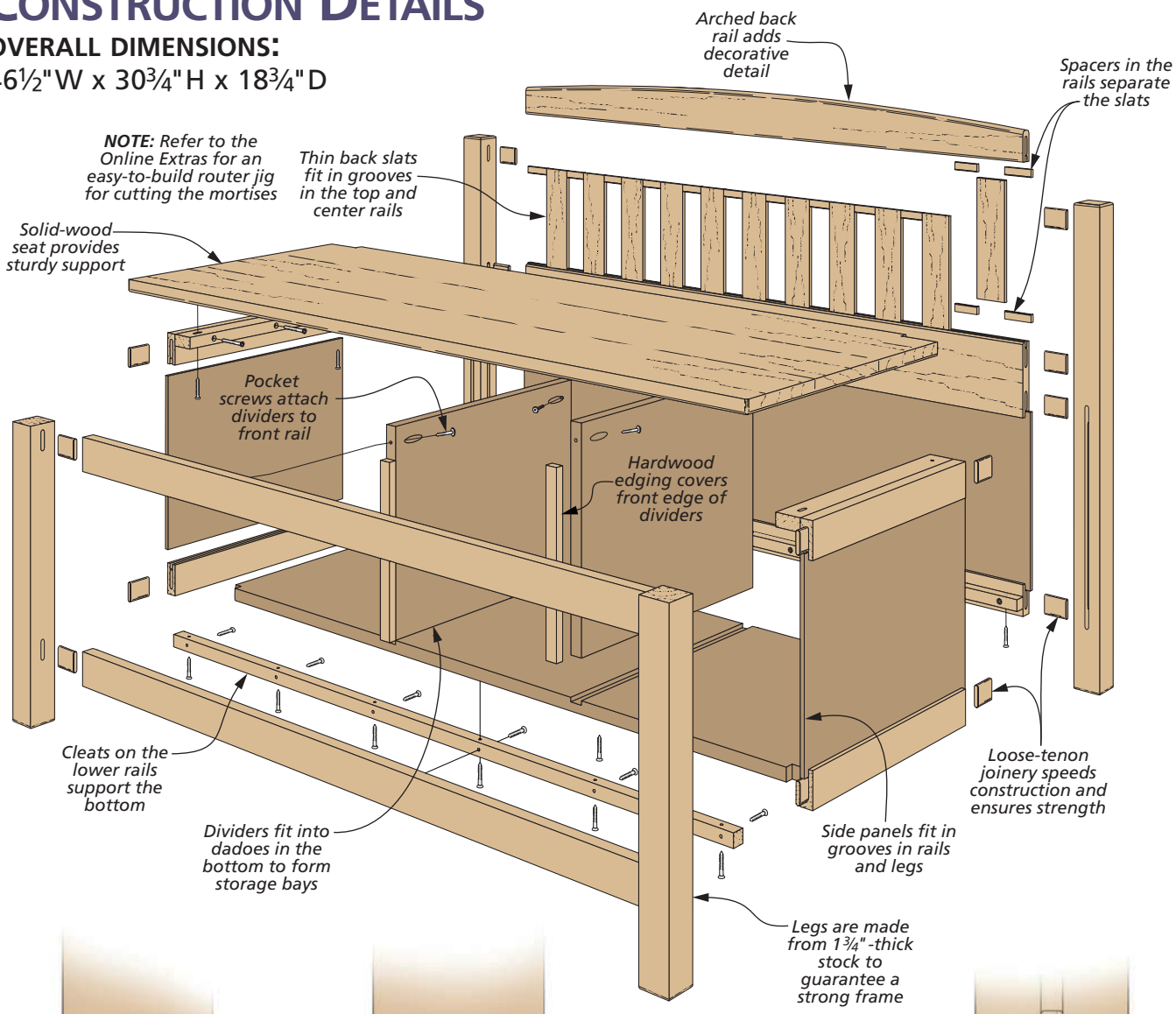

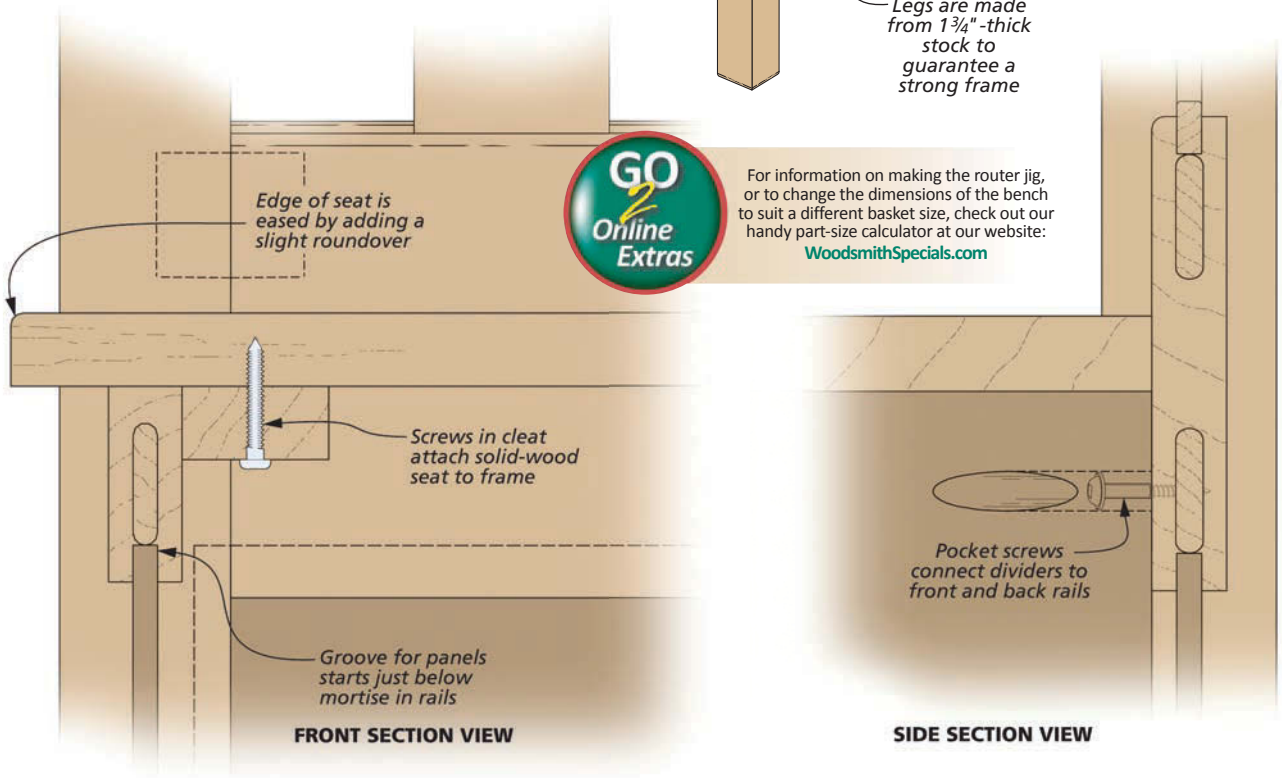

GO 2 Online Extras

For information on making the router jig, or to change the dimensions of the bench to suit a different basket size, check out our handy part-size calculator at our website: WoodsmithSpecials.com

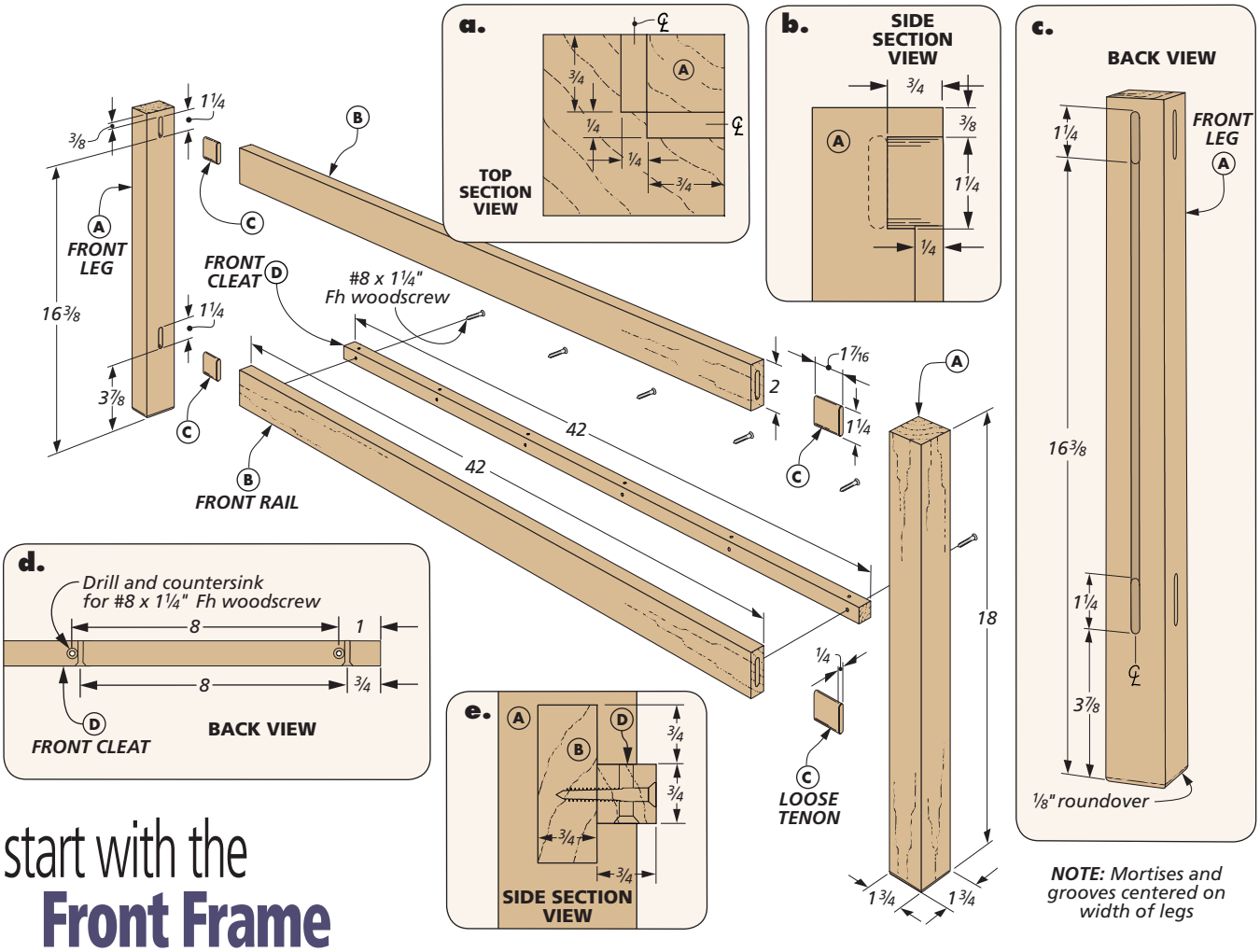

start with the Front Frame

The bench consists of a front and back frame that hold the storage bays in between. Starting with the front frame allows you to practice and perfect your technique for cutting and fitting loose tenons. This way, when you get to work on the more involved back frame, you'll be an old hand at the joinery and assembly processes.

The frame is simply two legs joined by two rails. As I said earlier, the loose tenons provide strong joints. I used the router jig shown on the opposite page to cut the mortises. It's simple to build, accurate, and very easy to use.

LEGS. To give the bench plenty of strength, I used 8/4 stock (1¾" thick) for the legs. If you can't find stock this size, you can always glue up thinner pieces. After planing the stock to its finished thickness, I cut the legs to final size. At the router table, I added a ⅛" roundover to the bottom of the legs.

RAILS. The rails are just ¾"-thick stock. You can start by cutting them to size. Next, mark the locations of the mortises on the legs and rails. You'll want to pay particular attention to the end points of each mortise. Since the router jig you'll be using will keep the cut centered, the start and stop locations are the key layout marks.

ROUT THE MORTISES. Now you're ready to cut the mortises for the loose tenons. The techniques illustrated on the opposite page give you an overview of each of the different types of cuts you'll need to make.

I started by routing the mortises in the legs. Note that the mortises on the back face are joined by a shallow groove that holds the side panels. You can rout this groove using the router jig, as well.

For the mortises in the rails, start by securing the workpieces in a vise or clamp them vertically to your bench before routing. You might also need to clamp supports to the sides to stabilize the router.

Cut the tenon stock. With the mortises done, it's time to make the loose tenons. You only need about 30" of stock for the 20 tenons used throughout the project, but I usually try to make a few extra. I started by resawing and planing some hardwood stock to fit snugly in the mortise (¼"). It's a good idea to begin with the stock a little thicker than the mortise and then sneak up on a good fit.

After you've milled the stock to thickness, you can move to the router table and round over all four edges. Then, all that remains to do is cut the tenons to final length.

ASSEMBLY TIME. Begin assembling the front frame by gluing tenons in each of the mortises on the rails. Then add glue in the leg mortises and secure the assembly with clamps.

ADD THE CLEAT. I attached a cleat to the inside of the lower rail to provide a platform for the bottom. Start by cutting the cleat to final size, then drill countersunk holes, as shown in detail 'd' above. Finally, attach the cleat using a little glue and a few screws.

How-To:
Loose-tenon Joinery

The thought of drilling and squaring up the 40 mortises used in the bench may seem a little daunting at first. But by using a plunge router and a simple jig to guide it, you'll make short work of them all. (The Online Extra has the details for building the jig.)

The jig is just an auxiliary baseplate for your router with two adjustable fences. These fences trap the stock in between and keep the cut centered on the thickness of the workpiece. By attaching the fence with carriage bolts and wing nuts, the fences can be adjusted for different thicknesses of stock.

Using the Jig. When you're ready to rout the mortises, first install a spiral upcut bit in the router. I found that this style of bit works well for these cuts because it clears the chips quickly. Then, using the layout marks on your workpiece, set the fence positions. Use a piece of scrap the same thickness as the workpiece to make test cuts and tweak the settings until the mortise is perfectly centered. (Once you have it set, you might want to rout all the workpieces of that thickness before moving the fences.)

After centering the bit, the next step is to set the depth of cut. With a plunge router, this is simply a matter of zeroing out the bit and adjusting the depth stop.

You'll need to clamp the workpiece in place, making sure the clamps won't interfere with the path of the router. For the legs, this isn't a problem. But when it comes to routing the ends of the rails, you'll need to hold them in a vise and clamp a couple of scraps to the workpiece to support the jig.

Finally, rout the mortises using a few light passes rather than one deep pass. This will result in a cleaner cut. The depth stop on your plunge router makes this easy.

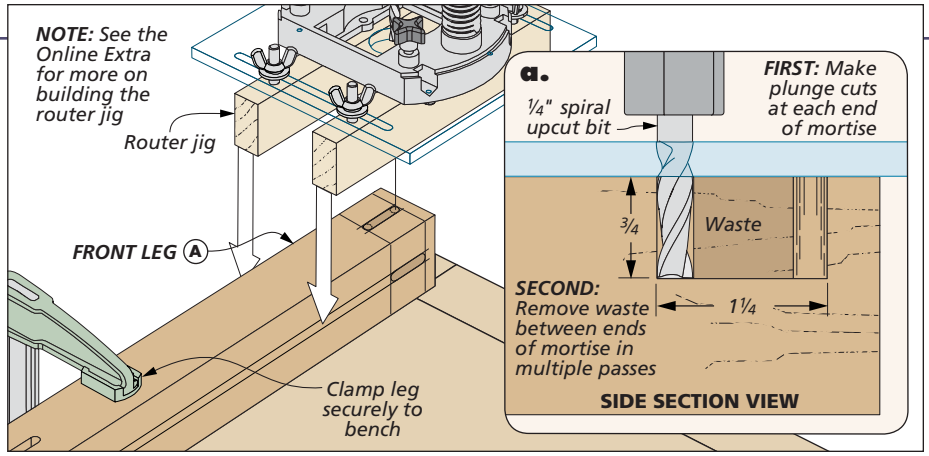

Routing the Leg Mortise. After adjusting the fences on the router jig so the bit is centered on the width of the workpiece, plunge the bit to full depth at each end of the layout marks for the mortise. Then, using a few shallow passes, rout away the waste in between.

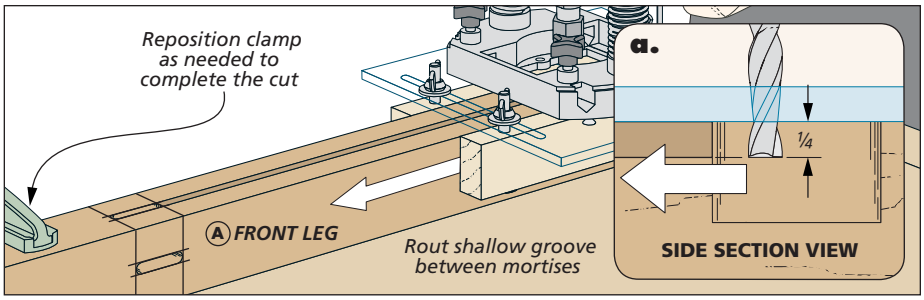

Routing the Groove. With the leg mortises complete, reset the depth of the router bit and rout the shallow groove for the end panel. The fences keep this groove in line with the mortises, ensuring a perfectly aligned assembly.

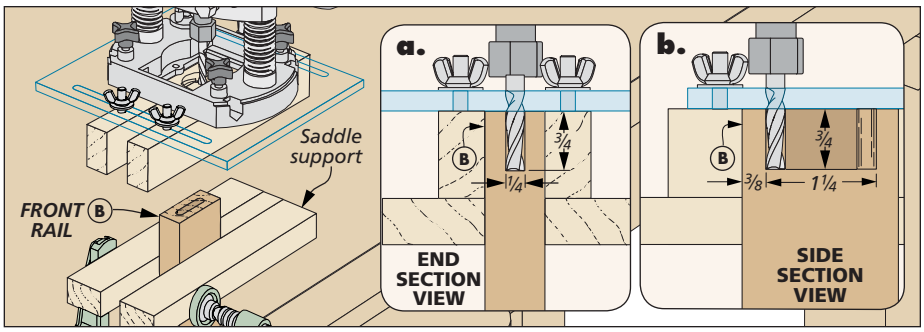

Rail Mortises. Start by clamping the rail vertically in a vise or securing it to the bench with clamps. Then, clamp short pieces of hardwood to the rail for the fences of the router jig to ride on. Finally, rout the mortises using the same technique as you did for the legs.

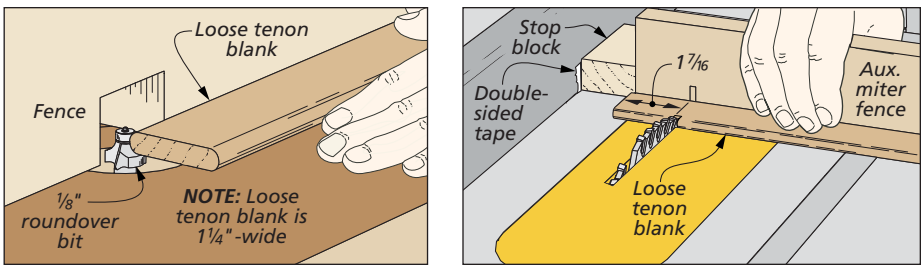

Making Loose Tenons. After milling the stock to thickness and width, round over the four long edges at the router table. Then move to the table saw and cut the tenons to length using a stop block and an auxiliary fence on the miter gauge.

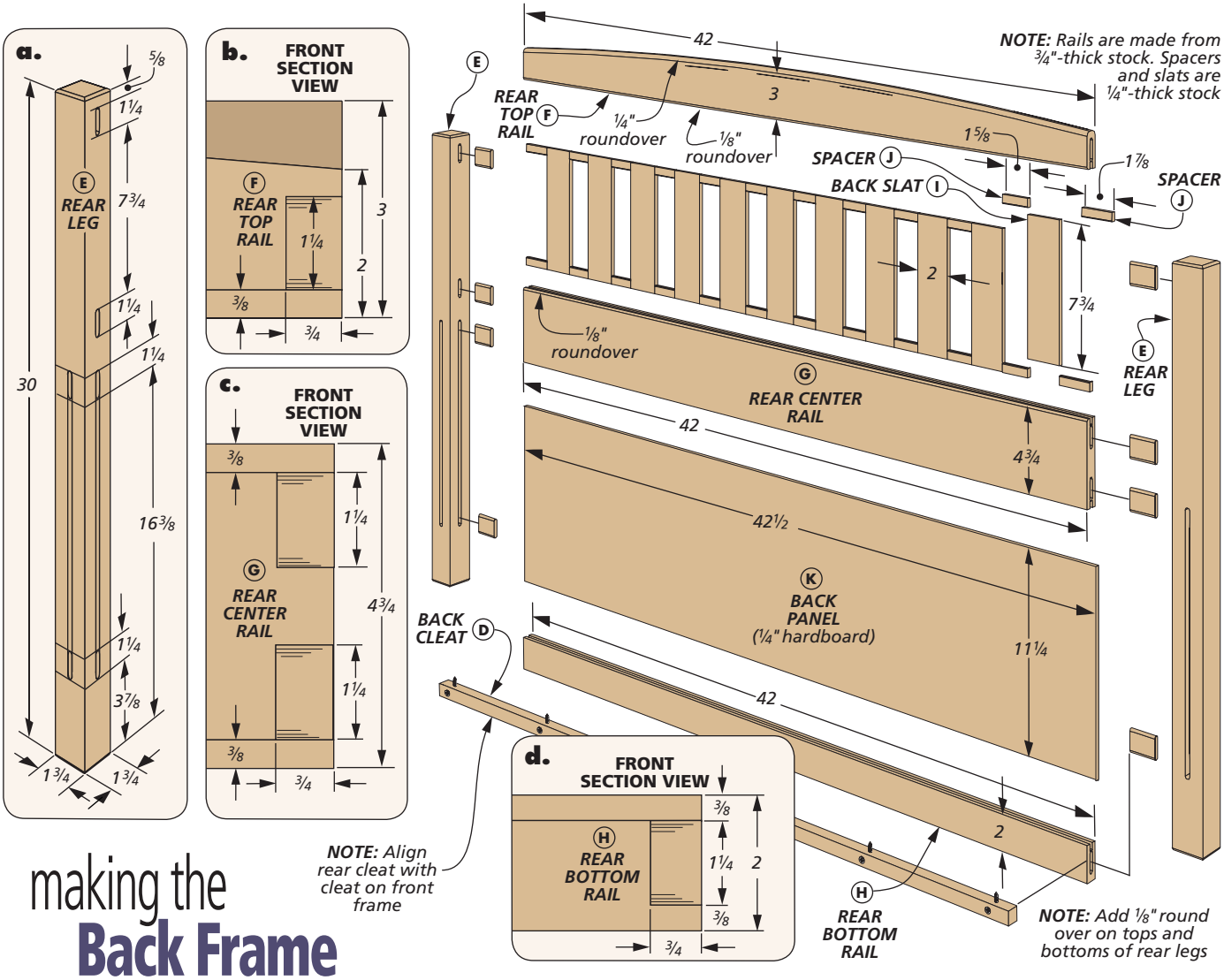

making the Back Frame

The back frame is similar to the front in construction. But it features a curved top rail and slats to provide back support. Below the slatted back rest, a hardboard panel encloses the back of the storage bays.

LEGS. You'll want to start with the legs. This time, you'll also need mortises to accommodate a wide center rail. As you can see in the main drawing above, this rail requires two mortises. Begin by laying out the locations and then rout each one.

Now you can rout the grooves for the side panels. Note that there's also a groove on the inside face of each leg that will hold the hardboard back panel.

RAILS. The rails for the back frame not only provide structural support, but they

How-To: Make Spacers & Open Grooves

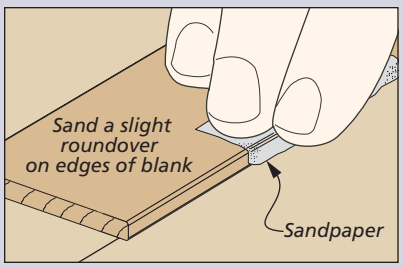

Ease the Corners. Start with extra-wide stock for the spacers and round over the corners with 220-grit sandpaper.

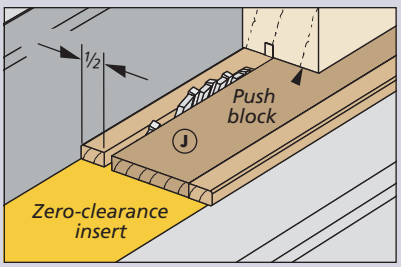

Rip the Spacers. At the table saw, rip the spacer stock to final width. Use a push block to make the cut safely.

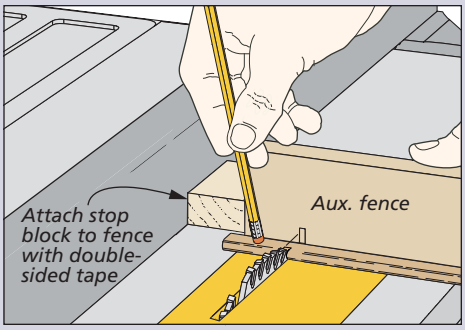

Cut to Length. With an auxiliary fence on the miter gauge and a stop block attached to the rip fence, trim the spacers to final length.

also hold both the lower back panel and the slatted back rest. You can start by cutting the three rails to size. Then it's back to the bench to rout the mortises on the ends. Use the same technique for these cuts as you did earlier on the front rails.

At this point, you're ready to cut the grooves in all three rails. The grooves in the top rail and on the center rail hold the back slats and spacers. The bottom rail and the groove on the lower edge of the center rail hold the hardboard back panel. The box below shows how I made these cuts at the table saw.

TOP RAIL. With the mortises and grooves complete, you can turn your attention to laying out and cutting the arch on the top rail. The centerpoint of the arch is 1" higher than the ends. The easiest way to lay out the arch is to bend a flexible strip of wood to match the profile of the curve while you trace it onto the workpiece.

Next, you can move to the band saw and cut the arch. After sanding the outside curve smooth, step over to the router table to add the roundovers on the top and bottom edges.

LOWER PANEL. The next step is to cut the hardboard back panel to size. It's worth taking a few minutes at this point to dry fit the panel in the rails and legs. This way, you'll be assured of a good fit before moving on to the assembly.

BACK SLATS & SPACERS. A series of thin back slats separated by short spacers forms the back rest for the bench. For both the slats and the spacers you'll need to start by milling some ¼"-thick stock.

Shop-Tip: Assemble Back Rest

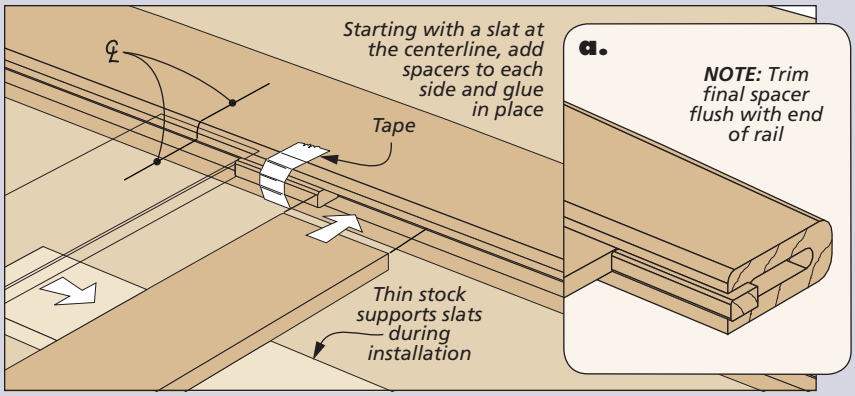

After preparing the thin stock, you can cut the slats to final size. Then, cut a wide blank for the spacers. Ease the edges with sandpaper and rip the spacers to final width, as shown in the box on the opposite page. Finally, cut the spacers to finished width. When cutting the spacers to length, note that the end spacers are longer than the others. It's a good idea to wait and cut these after dry fitting the others in the assembly. This way you can cut them for a perfect fit.

ASSEMBLY. I started the assembly by marking the centerline on the length of the top and center rails. Using this centerpoint, I centered a slat in the groove on the top rail and glued a spacer on each side and secured it with tape. The tape acts as a clamp to keep the spacers in position.

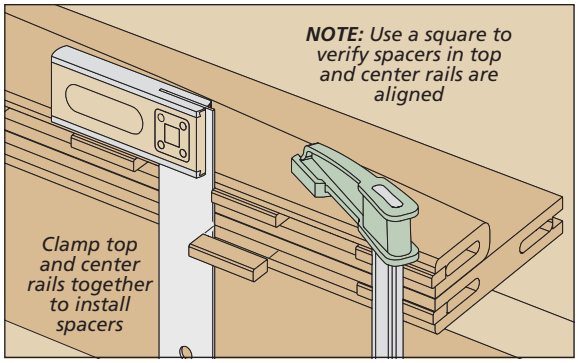

Now it's just a matter of using the slat to position and install the remaining spacers with glue and tape. When you've finished adding spacers to the top rail, clamp it to the center rails as shown in the lower illustration above. This way, you can use it as a template for adding spacers to the center rail. Using a square makes this method almost foolproof and guarantees the spacers in the two rails will match when you install the slats.

From here, the entire back frame comes together at once. After the glue on the spacers has dried, you can add the slats between them with a little glue in both the top and center rails. Keep your square handy and check the slats as you clamp the assembly.

Now simply glue the tenons in all three rails and add the back panel in the grooves in the lower and center rails. To complete the assembly, just add glue to the mortises in the legs and clamp it all together.

The last step in completing the back frame is to add the cleat on the lower rail. Just like the cleat on the front frame, drill countersunk holes and attach it with glue and screws.

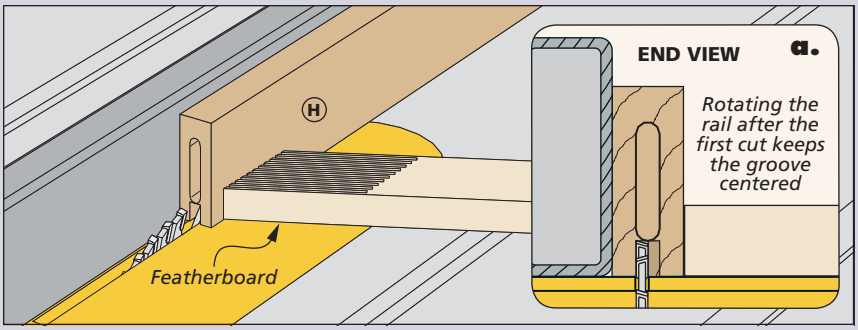

Cutting Grooves for the Panels. You can cut the grooves at the table saw using a regular blade. Start the first cut a little off-center, as shown in the inset, then rotate the rail end-for-end and repeat.

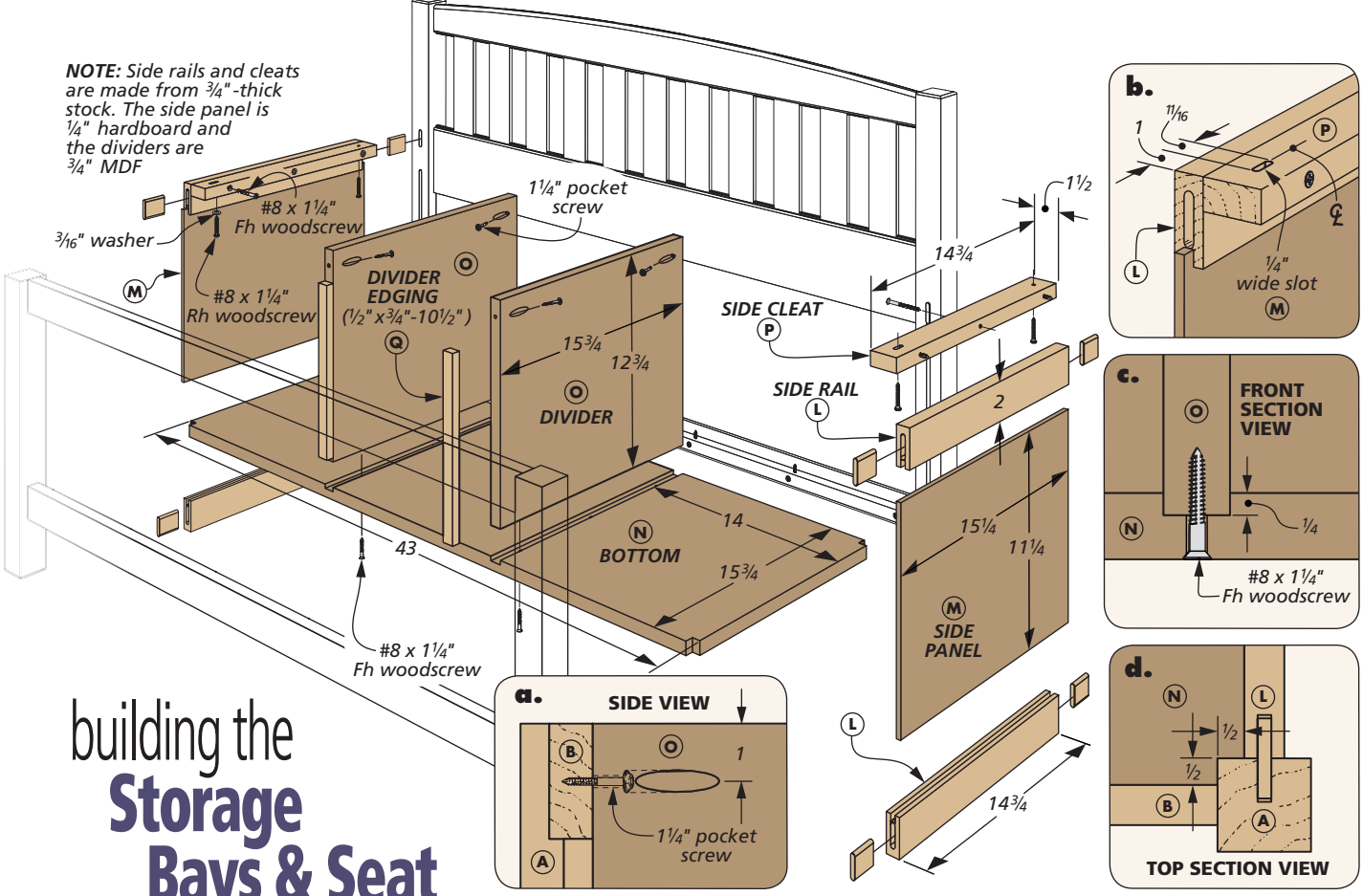

building the Storage Bays & Seat

The three storage bays are formed by making a simple box with two dividers fit into dadoes in the bottom. The dividers are attached to the front and back rails using pocket hole joinery or the alternate method shown in the box below. Side frames join the front and back frames and also connect the bottom and the hardwood top. I started by making the side frame assemblies.

SIDE FRAMES. The side frames consist of rails that hold a hardboard panel. The rails are attached to the front and back frames with loose tenons. After cutting the rails to size, you can rout the mortises and the grooves that will hold the panel. I cut the hardboard panels to size and glued them into the grooves.

To attach the hardwood seat, I also added cleats to the upper rails. After cutting the cleats to final size, just drill holes for the screws. Note the front end is slotted to allow for seasonal wood movement (detail 'b'). Then fasten the cleats to the inside edge of the rails.

BOTTOM. With the side frames complete, you can turn your attention to the bottom. It's just an MDF panel with dadoes to hold the dividers. It's also notched on the ends to fit around the legs. You can start by cutting the bottom to final size. You'll then need to install a dado blade in the table saw and cut the shallow dadoes to match the thickness of the dividers. To complete the bottom, drill holes in the dadoes so you can attach the dividers with screws later.

DIVIDERS. The dividers not only form the storage bays, but they support the top as well. As you can see in the drawing above, you'll need to drill pocket holes on the front and back edges to join them to the rails. You can install the dividers in the dadoes in the bottom with glue and screws.

ASSEMBLY. Assembling the bench isn't too difficult because you've already built a few sub-assemblies (the front and back frames, the side frames, the bottom and dividers). Now you can

Shop-Tip: Optional Joinery

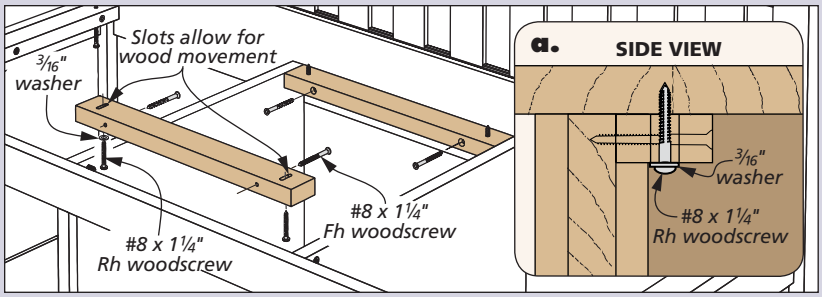

No Pocket Hole Jig? You can attach the dividers to the front and back rails using two cleats. Simply cut the cleats to fit between the dividers and drill countersunk holes to attach to the rails and top. Fasten the cleats to the dividers with screws.

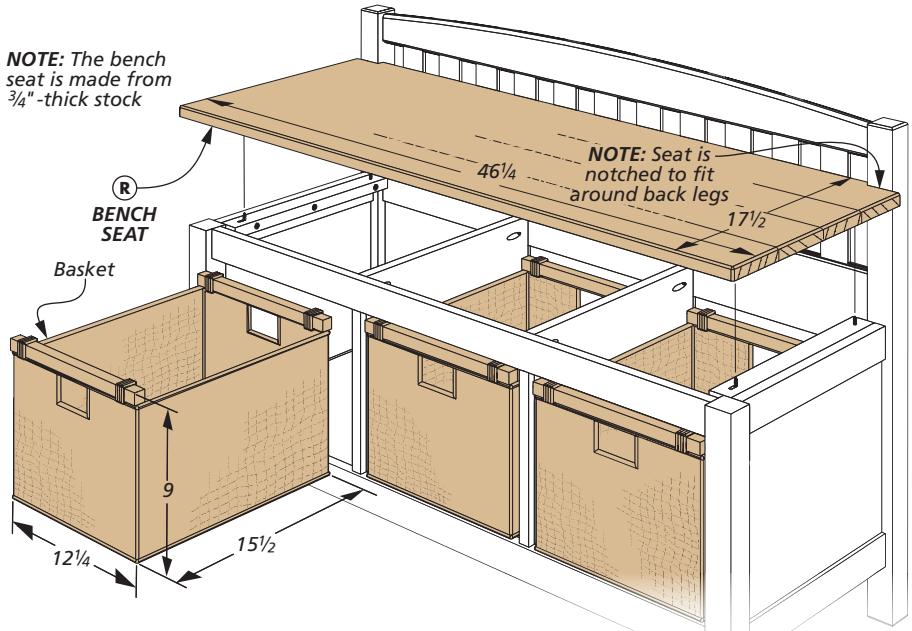

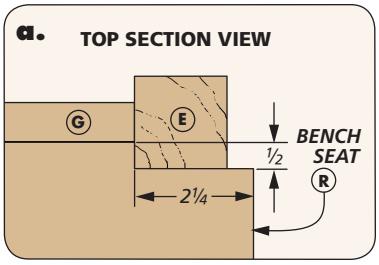

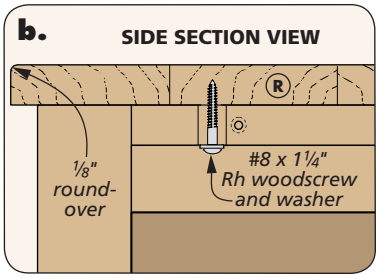

start putting it all together by gluing tenons in the side frames. Then, glue them into the front and back frames. Place clamps at each tenon location and make sure the assembly is square.

The next step is to drop the bottom in place on the cleats and secure it with screws. Now simply fasten the dividers to the front and back rails with screws in the pocket holes you drilled earlier. To complete the assembly, glue thin strips of edging on the front edge of both dividers.

THE HARDWOOD SEAT. The last component you need to make for the bench is the hardwood seat. It provides a nice decorative contrast to the bench. I chose oak because of its strength (as the seat of the bench) and its great looks.

You'll need to glue up a few pieces to get the final width of the seat. Take care to keep them aligned during the glueup. I find it helpful to add clamps and cauls on the ends to keep the pieces aligned and minimize any planing and sanding later. When the glue has dried, cut the seat to final size and set it aside until you've finished painting the bench frame.

PAINT FIRST. At this point, it's a good idea to paint the bench. This way, you'll have easier access to all the nooks and crannies. After applying a couple coats, you can attach the seat using screws through the cleats on the side frames.

Now you can place the baskets in the bays and put the bench to use. It's sure to provide many years of convenient storage.

MATERIALS, SUPPLIES & CUTTING DIAGRAM

A	Front Legs (2)	1¾ x 1¾ - 18
B	Front Rails (2)	¾ x 2 - 42
C	Loose Tenons (20)	¼ x 1¼ - 36 rgh.
D	Front/Back Cleats (2)	¾ x ¾- 42
E	Rear Legs (2)	1¾ x 1¾ - 30
F	Rear Top Rail (1)	¾ x 3 - 42
G	Rear Center Rail (1)	¾ x 4¾ - 42
H	Rear Bottom Rail (1)	¾ x 2 - 42
I	Back Slats (11)	¼ x 2 - 7¾
J	Spacers (24)	¼ x ½ x 48 rgh.
K	Back Panel (1)	¼ Hdbd - 11¼ x 42½
L	Side Rails (4)	¾ x 2 - 14¾
M	Side Panels (2)	¼ Hdbd - 11¼ x 15¼
N	Bottom (1)	¾ MDF - 15¾ x 43
O	Dividers (2)	¾ MDF - 12¾ x 15¾
P	Side Cleats (2)	¾ x 1½ - 14¾
Q	Divider Edging (2)	½ x ¾ - 10½
R	Bench Seat (1)	¾ x 17½ - 46½

- (44) #8 x 1¼" Fh Woodscrews
- (4) 1¼" Pocket Screws
- (2) #8 x 1¼" Rh Woodscrews
- (2) 3/16" Flat Washers

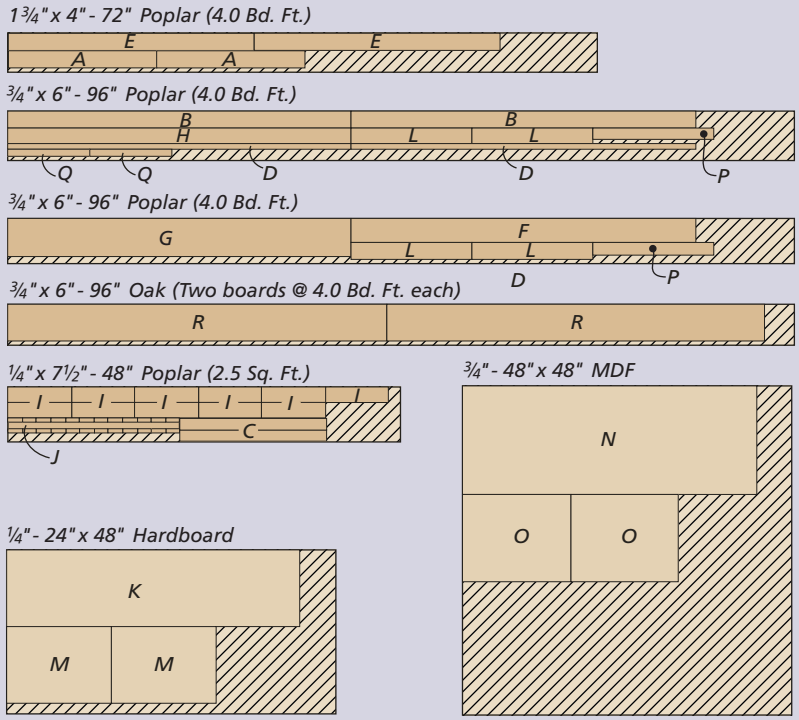

drop-front Storage Center

With storage above, below, and inside, this simple project allows you to organize all the items you never seem to have a place for.

Storage Options. The false-drawer front of the storage center drops down to reveal lots of storage for small items, while the double hooks underneath provide a good place to hang coats, scarves, and hats.

At first glance, this storage center appears to have four small drawers to go with its four coat hooks. But a closer look reveals that these "drawers" aren't really drawers at all. As the photo on the left shows, they disguise a drop-front door that hides plenty of storage for hats, sunglasses, gloves, or other items.

The construction is fairly straightforward. You only need a few boards and some hardware to get the job done. The joinery is simple to make, including a clever way to allow the front to drop down. All the joinery can be cut with your table saw and router.

What I like most about this storage center is that it's a small project that you can build in a weekend. Yet, it provides big storage and organization to any entryway. And if the country pine look is not for you, we've also included a couple of different design options in *Designer's Notebook* on page 79.

Construction Details

OVERALL DIMENSIONS:
34½"W x 12¼"H x 8⅜"D

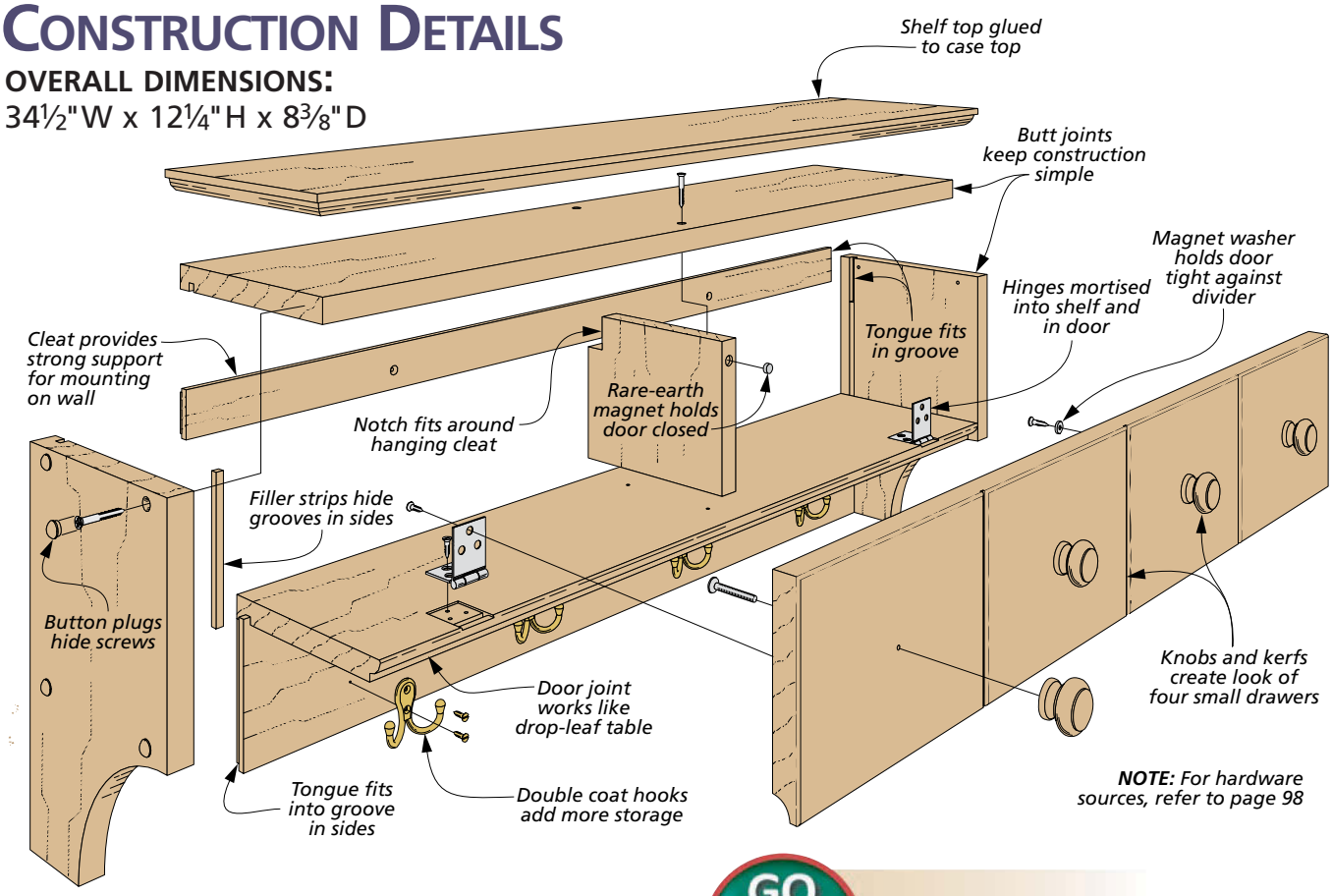

NOTE: *For hardware sources, refer to page 98*

MATERIALS, SUPPLIES & CUTTING DIAGRAM

A	Case Top (1)	¾ x 7¼ - 31½
B	Case Bottom (1)	¾ x 7¼ - 31½
C	Case Sides (2)	¾ x 7¼ - 11½
D	Divider (1)	¾ x 6¾ - 5½
E	Back (1)	¾ x 4¾ - 32
F	Hanging Cleat (1)	¾ x 1½ - 32
G	Filler Strips (2)	¼ x ¼ - 4¾
H	Door (1)	¾ x 5⁹⁄₁₆ - 31⅜
I	Top (1)	¾ x 8 - 34½

- (12) #8 x 1¼" Fh Woodscrews
- (2 pr.) 1¼" x 1½" Drop-Leaf Hinges w/Screws
- (4) 1¼"-dia. Wood Knobs w/Screws
- (10) ⅜"-dia. Button Plugs
- (1) ⅜"-dia. Rare-Earth Magnet
- (1) ⅜"-dia. Magnet Washer
- (1) #6 x ⅝" Fh Woodscrew
- (4) Brass Double Coat Hooks w/Screws

¾" x 7½" - 96" Pine (5 Bd. Ft.)

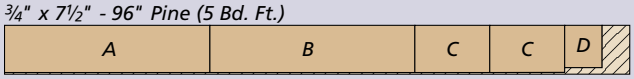

¾" x 6" - 96" Pine (4 Bd. Ft.)

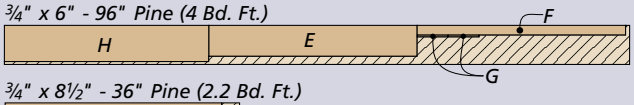

¾" x 8½" - 36" Pine (2.2 Bd. Ft.)

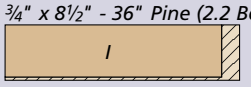

GO 2 Online Extras

For information about adding hinges to a rule joint, go to:
WoodsmithSpecials.com

SIDE SECTION VIEW

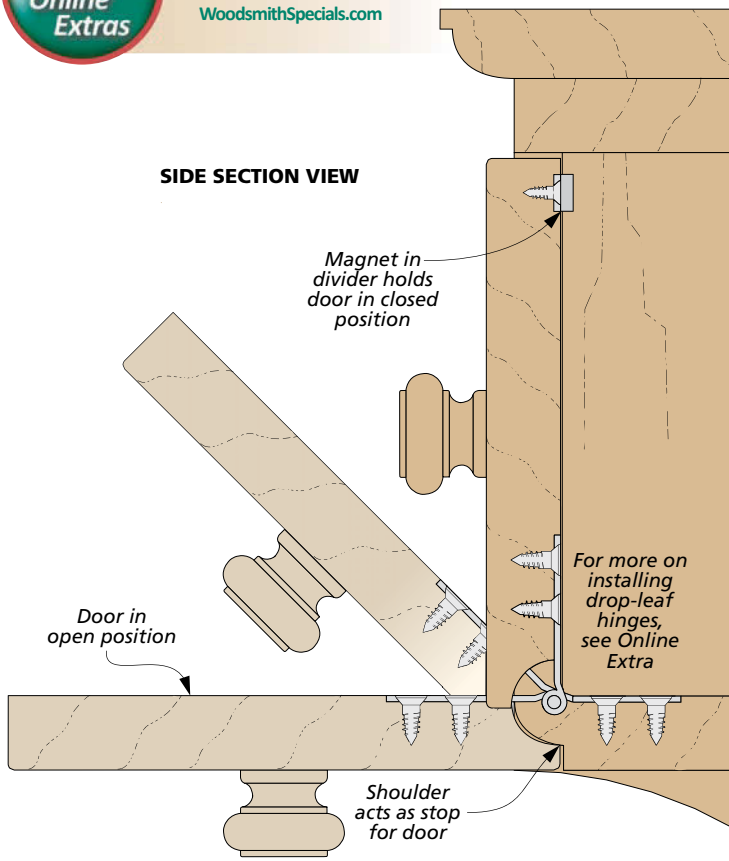

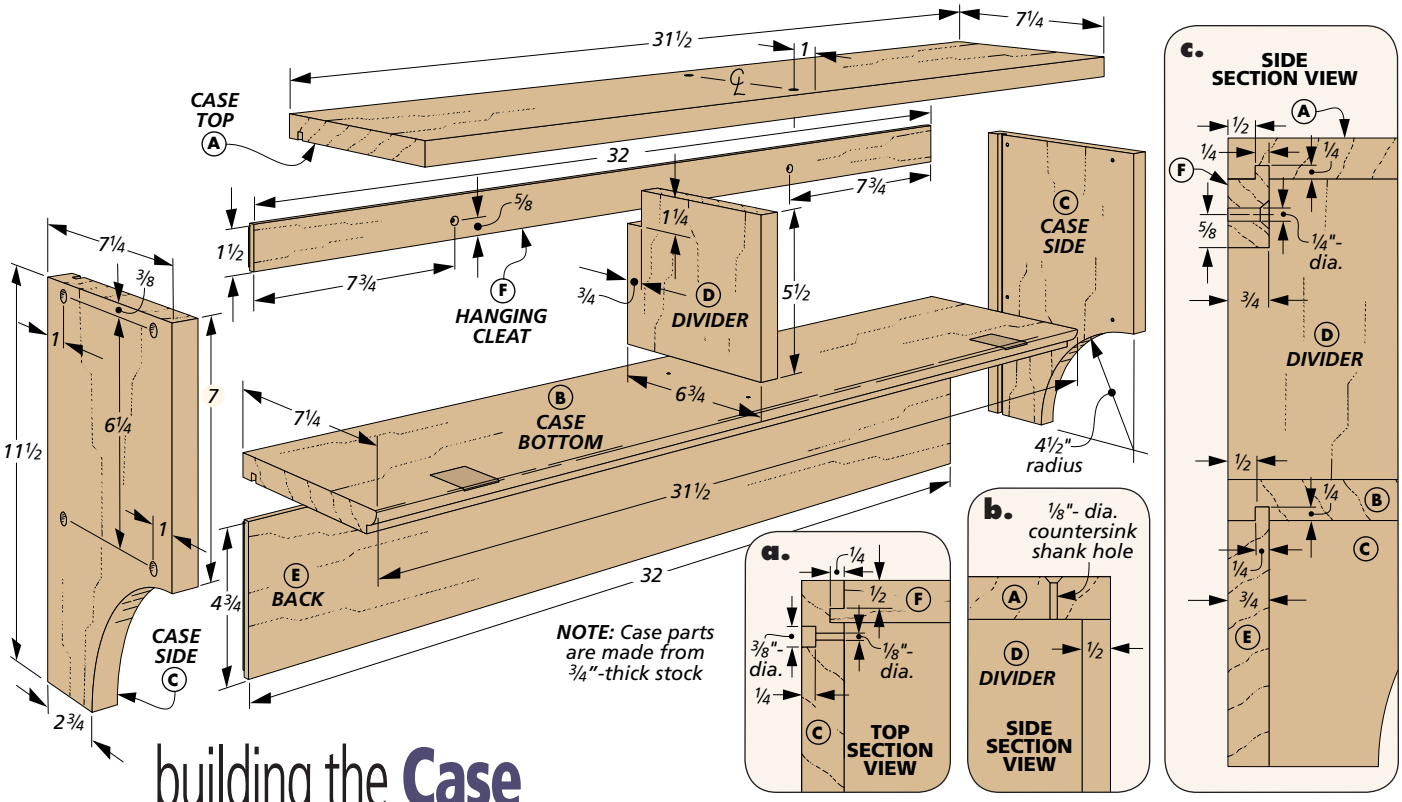

building the **Case**

If you take a close look at the drawing above, you'll see how the case goes together. It's made up of seven parts: a top and bottom, two sides, a center divider, a cleat that allows you to attach the shelf to the wall, and a back to hold some hooks.

To keep the project simple, the two side pieces are just screwed to the case top and bottom. But on the inside, there's some tongue and groove joinery to add stability. And since the sides, top, and bottom of the case have the grooves in them, that's where I started.

How-To: Tongue & Groove

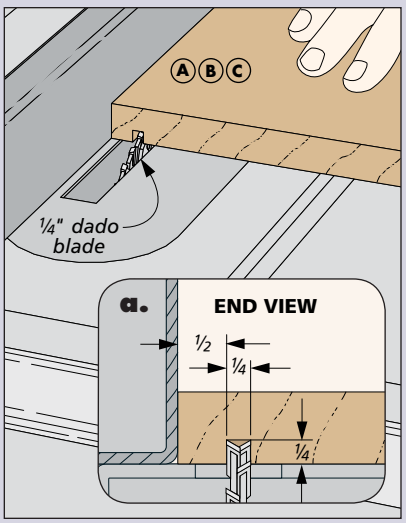

Grooves. Once you have the fence and dado blade set up, you can cut the grooves in the sides, top, and bottom.

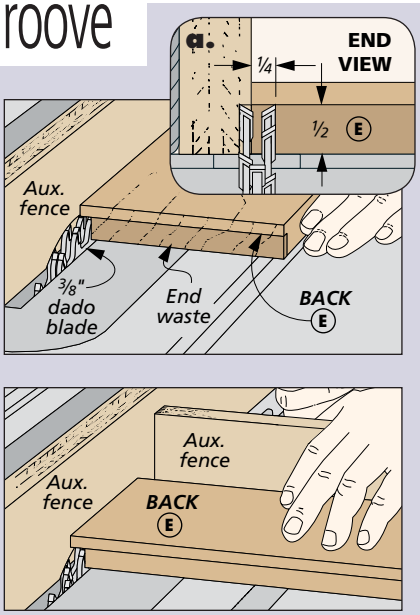

Tongues. I used a dado blade buried in an auxiliary rip fence to cut the tongues on three sides of the cleat and the back.

TONGUE AND GROOVE. The first step is to cut out the top, bottom, and sides. After that, it's over to the table saw to cut the grooves. I start with the grooves because it's easier for me to cut the tongues to fit the grooves than the other way around. The left drawing in the box below shows how I cut them. These grooves will hold the tongues in the hanging cleat and the back, as you can see details 'a' and 'c' above.

Now, you can set the sides, top, and bottom aside to start working on making the hanging cleat and the back. As I said earlier, you'll need to cut tongues on these parts to fit into the grooves you just made.

The two right drawings in the box show how to cut the tongues. But a trick I've learned is to "sneak up" on the fit. Since the grooves are already made, you'll want to purposely cut the tongues a little thick to start. Check the fit in the grooves, then raise the blade a bit and trim a little more material off the tongue. Repeat this process until the tongues fit snugly in the grooves.

CURVED PROFILE. With the tongues and grooves cut, you can go ahead and work on the curved profile on the bottom of each case side. Laying out the curve isn't difficult — just draw a 4½"-radius arc on one side. Then, to make sure the curve will match exactly on both side

parts, you can tape the sides together before making the cut.

Once the curve is laid out, you can cut it out with a band saw (see Shop Tip on the right). When making these types of cuts, I like to stay on the waste side of the layout and then sand up to the line with a drum sander. This way, I end up with smooth curves that are the same on both side pieces.

SCREW HOLES. After the curves are sanded smooth, this will be a good time to drill the holes for the screws that will hold the case together (detail 'a'). You can also do the same with the case top and bottom that will hold the center divider you'll make later (detail 'b'). After the holes are drilled and counterbored, it's a good time to start work on the rule joint for the door.

RULE JOINT. One of the features I like about this project is how the door works. It's similar to a drop-leaf table, only upside down.

But this is done for more than just looks. A rule joint allows the weight of the door to be distributed evenly along the edge of the case bottom, not just on the hinges. (The Side Section View on page 75 illustrates this.)

The joint combines two matching profiles: a roundover on the case bottom and a cove on the door. When the door is lowered, the cove wraps around the roundover and rests on the shoulder. The box below shows how to set up to rout the roundover. I'll talk about routing the cove on the door later.

THE DIVIDER. With the case parts complete, you can move on to the divider. After cutting it to size, all you have to do is cut a notch that allows it to fit around the cleat (see main drawing on previous page).

WRAPPING UP. Although the case parts are complete and ready for assembly, I held off putting it together for now. For one thing, it'll be easier to test and adjust the rule joint while everything is apart. And you'll need to align the drop-leaf hinges between the door and the case bottom, as illustrated in the photo on the right below and in the Online Extra.

So just set these parts aside for now to start working on the door.

Shop Tip: Curved Profile

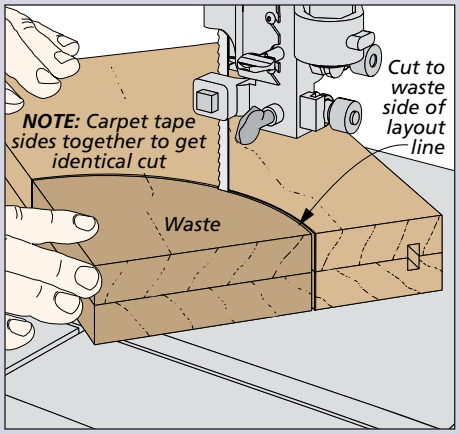

Curve on the Band Saw. Stay on the waste side of the layout line to cut the curve in the sides of the storage center.

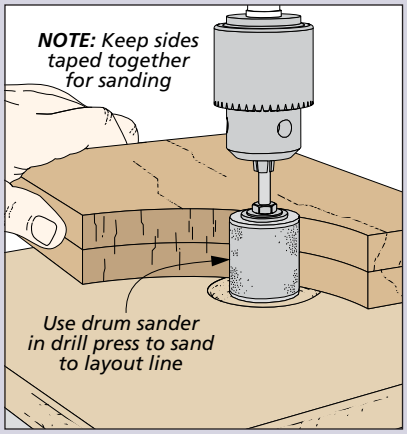

Finish at Drum Sander. With the sides still taped together, use a drum sander to smooth both sides to the layout lines.

How-To: Bottom Edge Profile

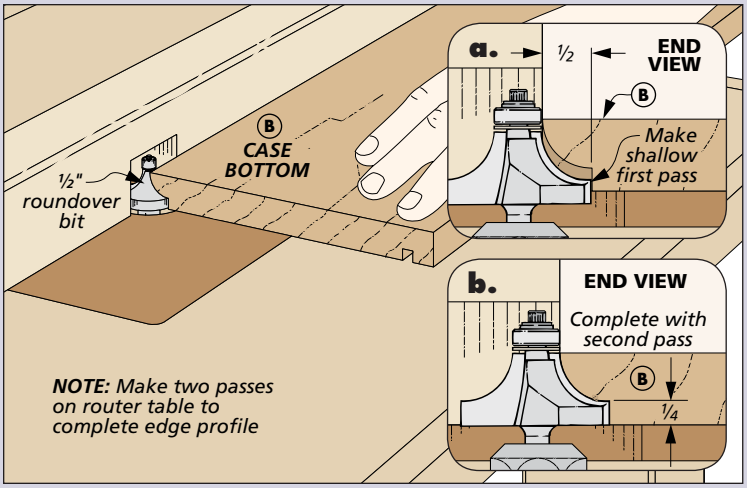

Rule Joint Profile. To prevent tearout and burning while routing the roundover on the case bottom, make a shallow pass first, then raise the bit to the final height to complete the profile.

Rule Joint. Refer to *WoodsmithSpecials.com* for more information on installing the drop-leaf hinges for the drop-down door front.

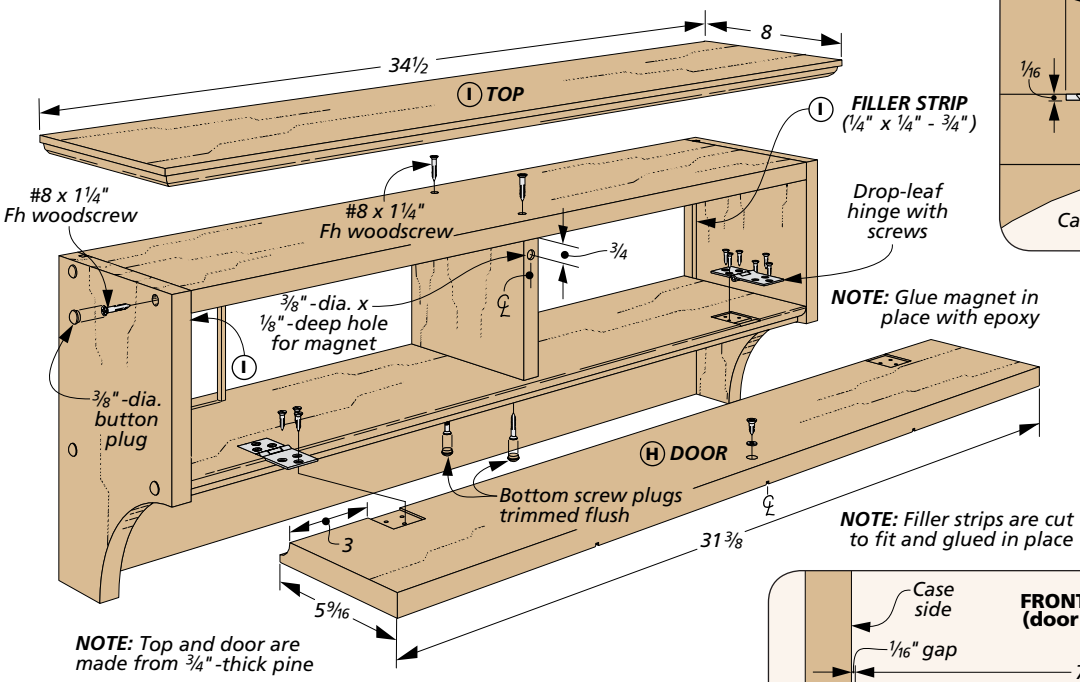

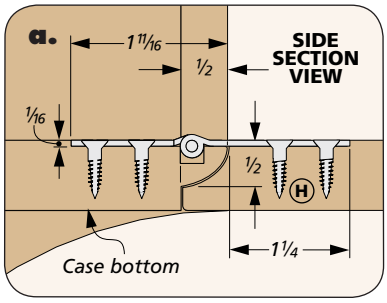

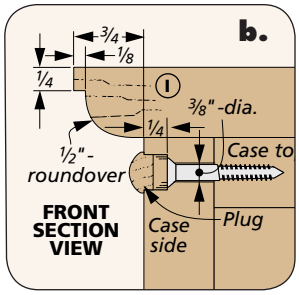

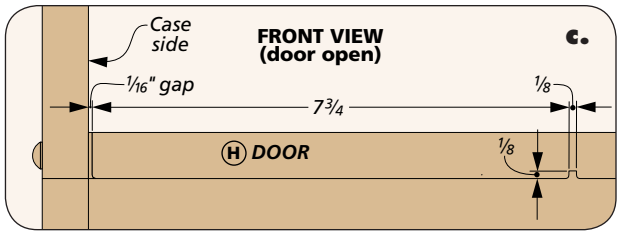

completing the **Shelf**

With the case parts done, it's time to add the final touches. There's a fair amount of work to be done to the door, like completing the rule joint, routing the hinge mortises, and making the "drawers." So that's a good place to start.

DROP-FRONT DOOR. After cutting the door to size, the first step is to rout a cove on the bottom edge of the door (see left drawing below). The cove will mate with the roundover routed on the front edge of the case bottom to create the rule joint.

HINGE MORTISES. The next thing to do is rout the mortises for the hinges. To make sure the mortises in the door and bottom were aligned, I laid the door in front of the bottom and marked where they should go (see main drawing and detail 'a' above). The Online Extra shows how to mark the locations of the hinges and install them.

MAKE THE "DRAWERS." Once the mortises were cut, I started work on the false drawers. The idea here is to cut equally spaced kerfs in the door to give the appearance that the storage center holds four drawers (see detail 'c' above and the right drawing in the box below).

Before assembling the case, there are a couple more things left to do. First, drill holes for the knobs (drawing on opposite page). And second, install a magnetic catch (detail 'a' on next page). Once these things are completed, you can assemble the case.

SHELF TOP. The next step in the construction is to add the top to the case. I routed

How-To: Door Shaping

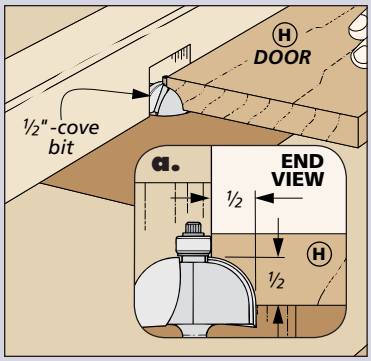

The Cove. The profile routed on the bottom of the door should mate with the edge of case bottom.

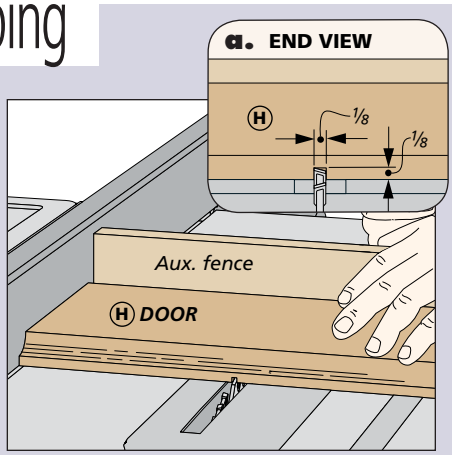

Drawers. Evenly spaced kerfs cut into the front of the door creates the illusion that the storage center contains four small drawers.

Instant Aging. Distressing the finish gives the storage center a comfortable, time-worn appearance.

a ½" roundover with a shoulder along the front edge and the sides (detail 'a'). Then, you can simply glue the top to the case.

FILLER STRIPS. There's one final detail before moving on to the finish. Some of the grooves you cut earlier are visible on the inside of the case. Although it's not a big deal, I decided to glue in filler strips to give it a more finished look. Now, you're ready to move on to the finishing stage.

BACK PANELS

To give the shelf an antique look, I decided to "distress" it. What that means is taking a couple of tools or a ring full of keys and drop them randomly on the storage center. But don't get carried away — you want it to look old, but not beat up. I also softened some of the edges to add to the worn appearance (see photo on the previous page).

Then, I applied a walnut stain to the entire project. When that dries, paint right over the stain.

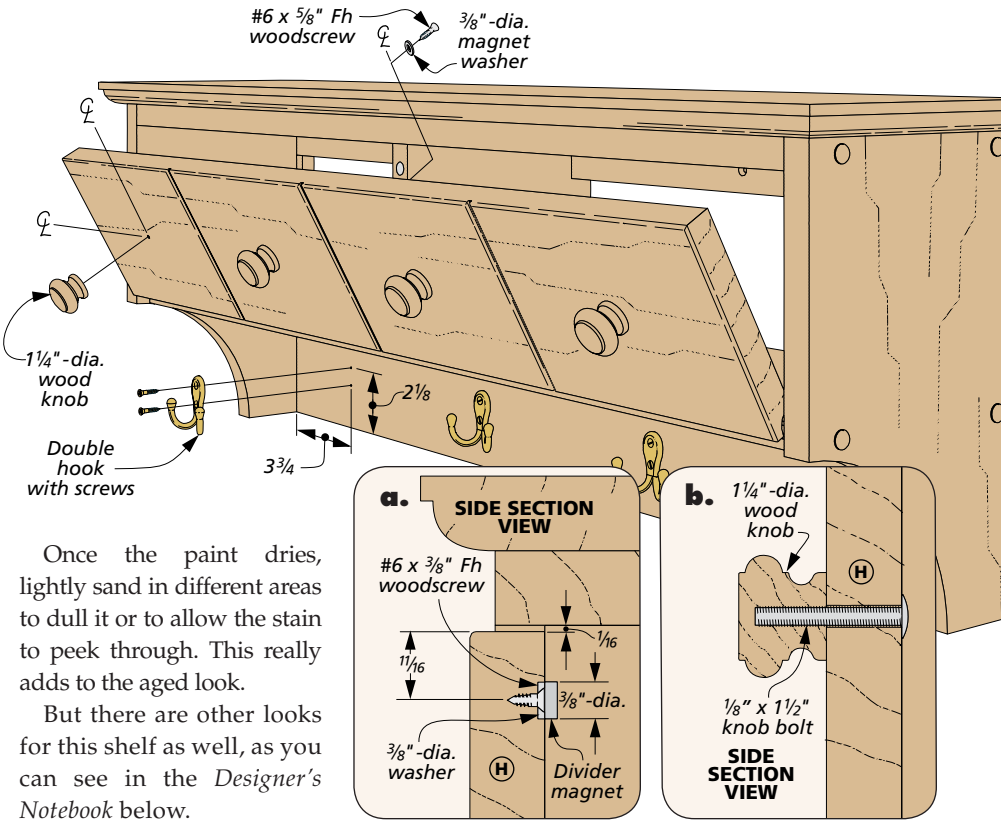

Once the paint dries, lightly sand in different areas to dull it or to allow the stain to peek through. This really adds to the aged look.

But there are other looks for this shelf as well, as you can see in the *Designer's Notebook* below.

Designer's Notebook

While working on this project, I couldn't help but think of all the different design options that could easily change the look of this project. A couple of ideas are shown in the drawings here.

For a more traditional look, you can change the edge profile of the top, add wood pegs, and cut an ogee profile in the sides. The detail drawings can help you with that.

Or, go with the straight lines shown in the drawing below for a clean, contemporary look.

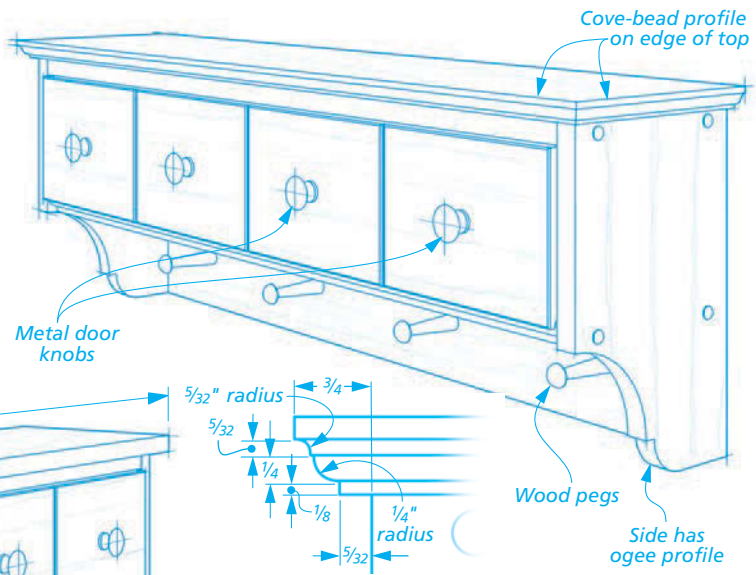

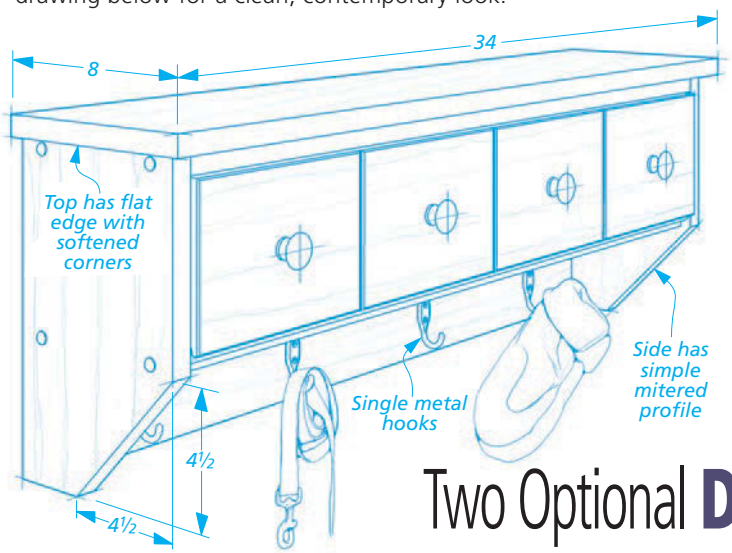

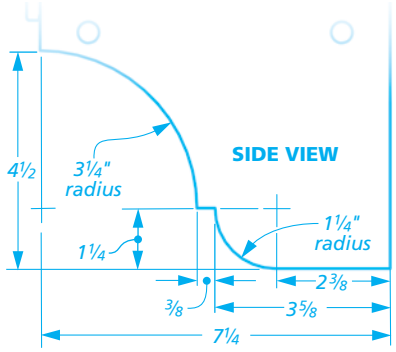

Two Optional Designs

weekend Projects

Don't have much time to invest in a large project? Why not give one of these weekend projects a try. They may be small in size, but the woodworking challenges are plenty, and the end results are enormous.

KEEPSAKE BOX.....82

SIX-CANDLE CENTERPIECE.....88

CRAFTSMAN-STYLE CLOCK.....92

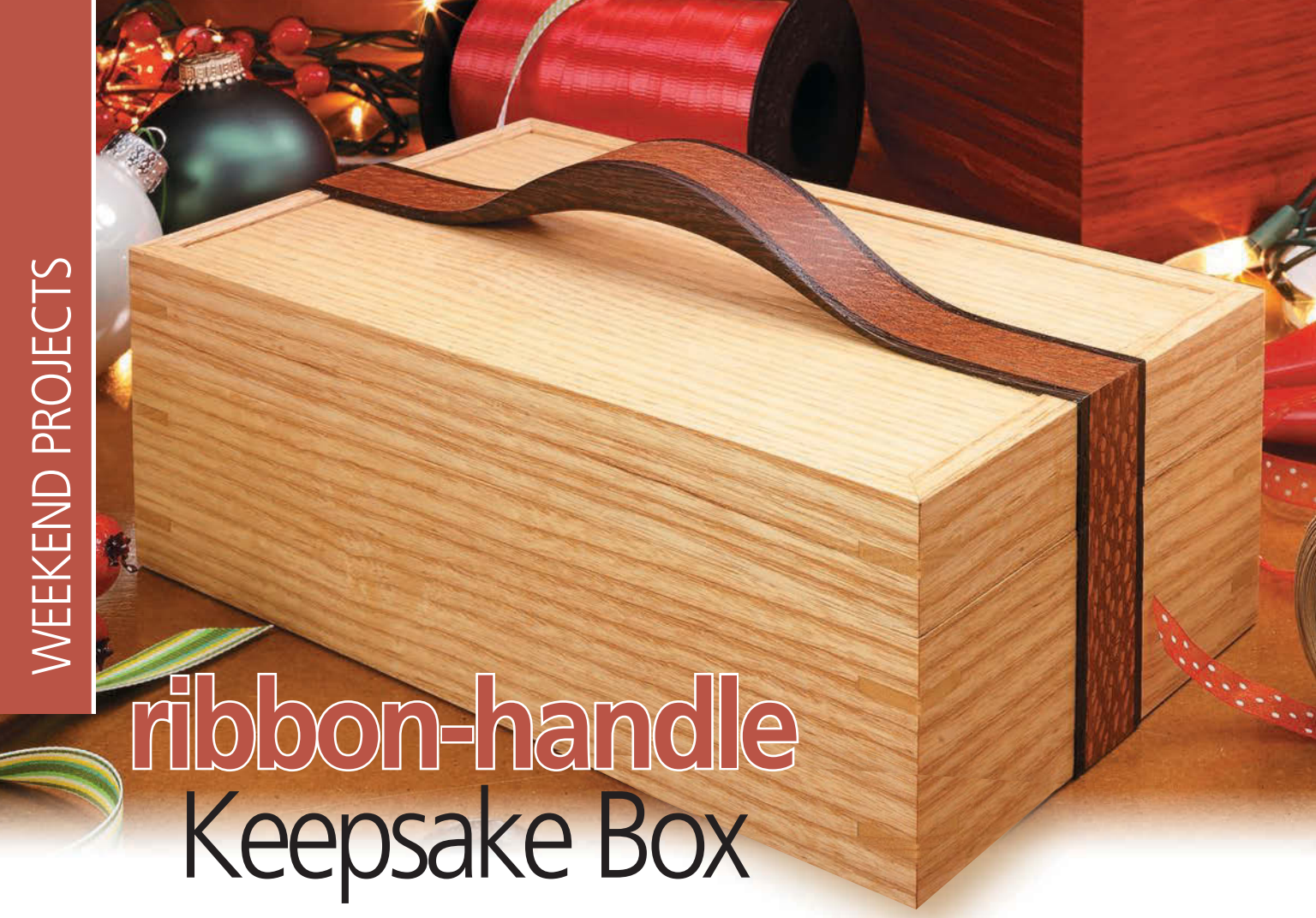

ribbon-handle Keepsake Box

This imaginative small-box design not only makes a wonderful gift idea, it's also a great way to build your woodworking skills.

I think of building boxes as a fundamental woodworking skill. After all, the techniques used to build a box are also key to many larger furniture projects. And when you consider the smaller scale of a box and the added scrutiny a small-scale project receives from the viewer, your woodworking skills, and attention to detail, will be put to the test.

Exercise in Contrasts. The "ribbon" box, named for the handle and inlay on the sides, is made from ash with a handle of lacewood and wenge.

Boxes are also perfect projects for using up small pieces of special or exotic wood. You probably have plenty of these leftover cutoffs from larger projects lying around the shop.

Our box design shown above is an excellent skill builder. With this project, the basic box is built using splined miters. The rabbeted bottom slips into grooves cut in the front, back, and sides. It also uses a simple technique for creating a lipped, fitted lid.

Plus, the "ribbon" handle on the lid features an interesting inlay made from a couple of different exotic woods. This offers a nice contrast with the rest of the box.

This box is sure to make a great gift all by itself. But you could also make one to use as the "wrapping" for an even more special present.

Construction Details

OVERALL DIMENSIONS:
5¼"W x 4 1/32"H x 8 13/16"D

Curved handle and ribbon inlay on sides are laminated from contrasting woods

Upper groove houses tongue on top panel

Inside groove forms lid and is routed before assembly

Rabbet on edges of top panel forms tongue

Lower groove holds bottom panel

Bottom and lid are lined with felt on posterboard

Groove routed after assembly separates lid from box

Slots for splines cut on the table saw using a shop-made jig. Refer to the Online Extra for details

Felt glued to bottom panel provides soft surface for underside of box

Matching hardwood splines reinforce mitered corners

Shallow dado for inlay cut at router table

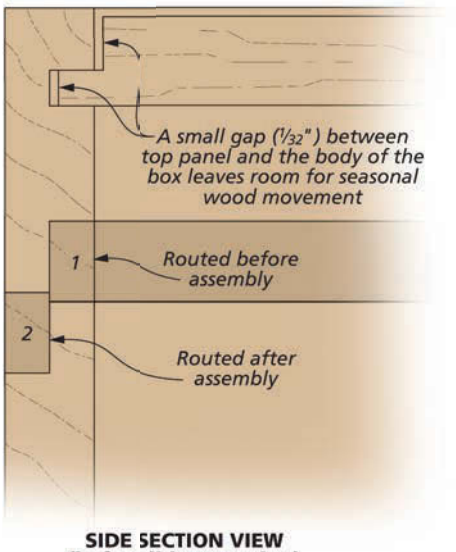

SIDE SECTION VIEW (before lid separation)

GO 2 Online Extras

To learn how to cut the spline slots at the table saw using a shop-made jig, go to:
WoodsmithSpecials.com

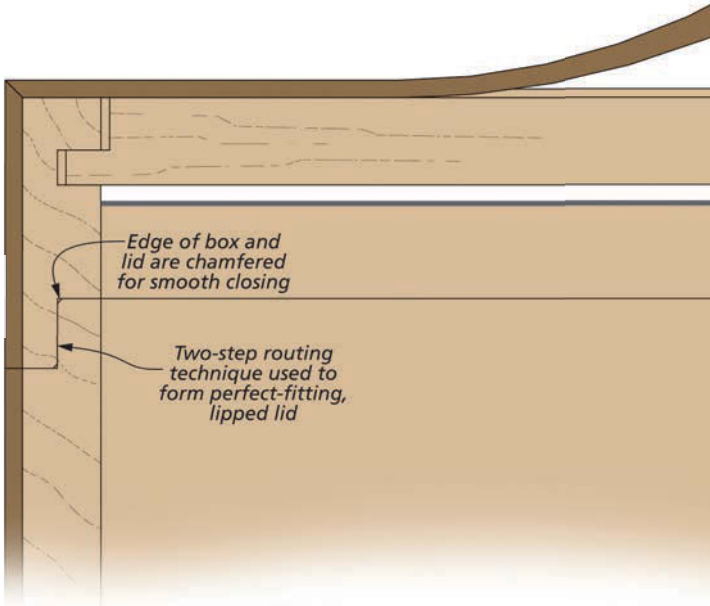

FRONT SECTION VIEW (after lid separation)

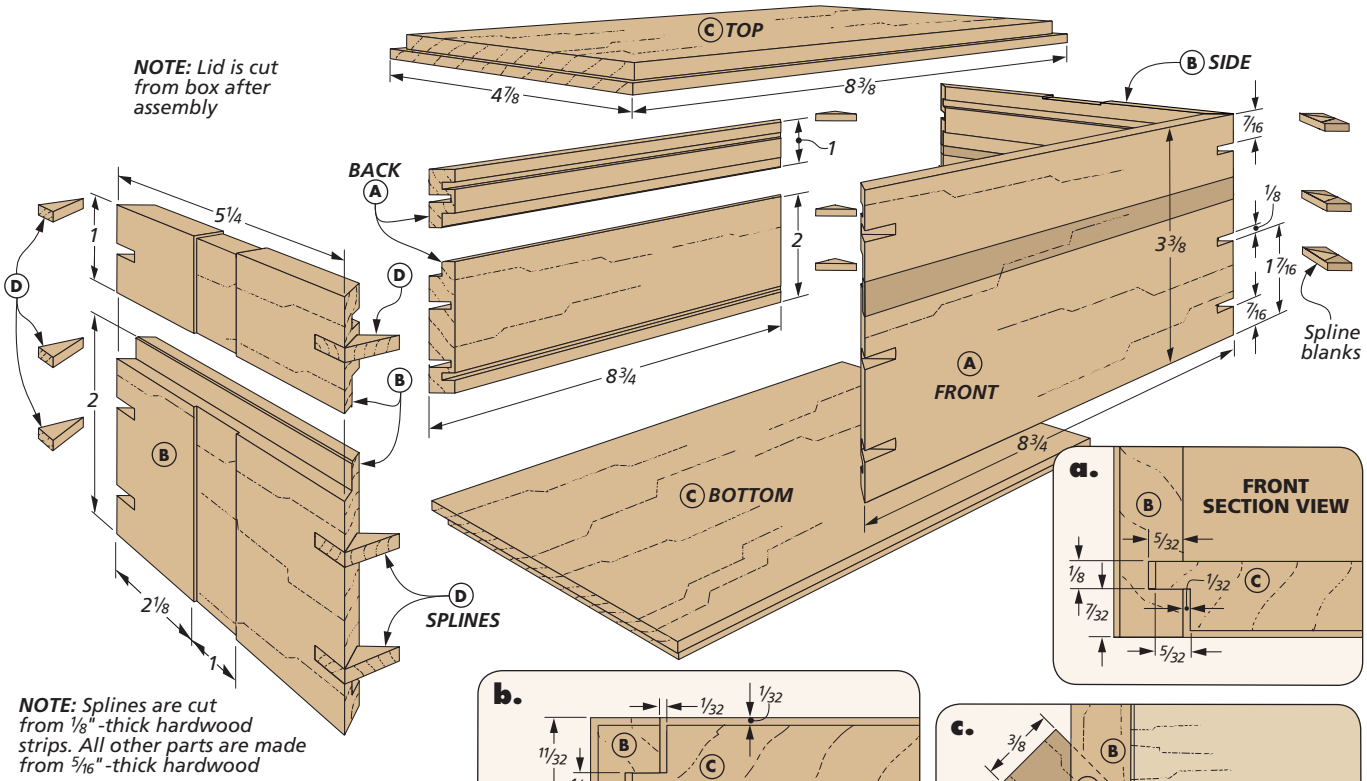

building the **Box**

As I explained earlier, the basic construction of the box is pretty straightforward. The key technique is the method used to separate the lid from the box once the box is assembled. This procedure is explained in the step-by-step drawings on the opposite page. But first, I began with the basic box construction.

FRONT, BACK & SIDES. The front, back, and sides all require 5/16"-thick hardwood. I started with 1/2"-thick stock and planed it down to final thickness. After cutting the pieces to width and rough length, I cut the grooves for the top and bottom in all four pieces. The box below shows the process.

Now you can move to the router table and install a 3/8"-dia. straight bit. I routed the lid groove with a straight bit because it provides a smoother finished cut than a dado blade. Later, you'll rout a groove on the outside of the box to form the mating bottom half. But for now, you can miter all four workpieces to final length.

TOP & BOTTOM. The top and bottom are rabbeted to fit into the grooves you cut earlier. You can start by cutting them to final size. Then, cut the rabbets for a snug fit in the grooves. As you test the fit, note that the top and bottom are slightly recessed and that there is a small gap to allow for wood movement (details 'a' and 'b').

ASSEMBLY. The step-by-step illustrations on the opposite page walk you through the process of assembling the box and completing the details. As you can see in Step 1, I taped the miter joints to keep things in place while I added clamping pressure. A band clamp is perfect for this application, but regular clamps

How-To: Cut & Rout Grooves

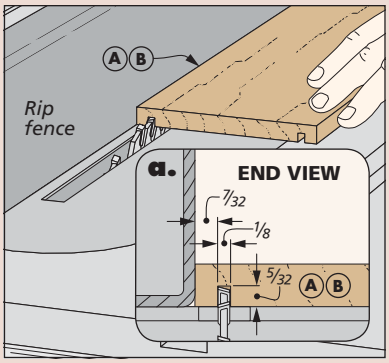

Grooves. Cut the grooves for the top and bottom panels using a standard blade in the table saw.

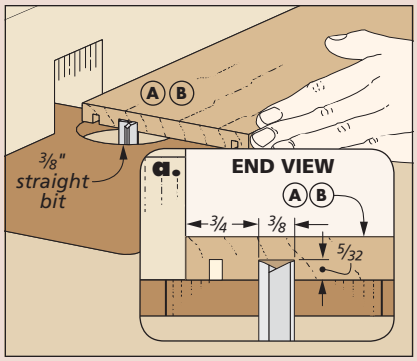

Inside Lid Groove. At the router table, install a straight bit and rout the groove that will form the shoulder of the lid.

will work fine as well. It's also a good idea to label the top edge of the box so you'll be able to orient it properly later.

To reinforce the miter joints, I added splines in each corner. A simple jig for the table saw makes short work of cutting the slots. (Refer to *WoodsmithSpecials.com* for details on the jig.) You can cut the top and bottom slot by flipping the workpiece in the jig, keeping the spacing even. The middle slot is not centered on the sides as you might expect. Instead, it's offset to allow for the groove you'll rout later when you separate the lid.

After gluing the splines in the slots, trim the "ears" off the ends. A flush-cut saw is the ideal tool for this task (Step 4). Then plane or sand the surface smooth.

ROUT THE CHANNEL. Now it's time to head over to the router table and rout the channel for the handle and inlays (Step 5). I started with the sides first, then routed the top edge of the sides.

It's a good idea to make a couple test cuts with a straight bit to dial in the 1/32" bit height. Then, set the fence and make your first cut. Next, flip the box side-for-side and make another cut. This technique will ensure the channel is centered on the box. Move the fence and rout away the remaining waste until you've cut a 1"-wide channel in both sides, including the top edges of the sides.

SEPARATING THE LID. At this point, you're ready to rout the groove that will separate the lid. As you can see in Step 6, you'll need to set the bit just a hair below final depth to avoid cutting all the way through. Then, simply place the top against the fence to rout all four sides. This technique will leave the lid attached to the box while you complete the cut. I used a utility knife to cut through the thin membrane and separate the lid (Step 7). Finally, use a sanding block to fine-tune the fit of the lid, as shown in Step 8.

How-To: Complete the Box

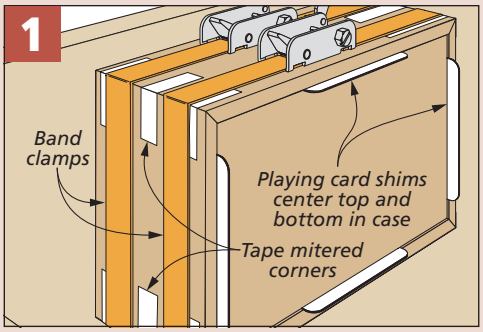

Assembly. Assemble the miter joints with glue, tape, and band clamps. Cut strips of playing cards to use as shims to maintain an even gap.

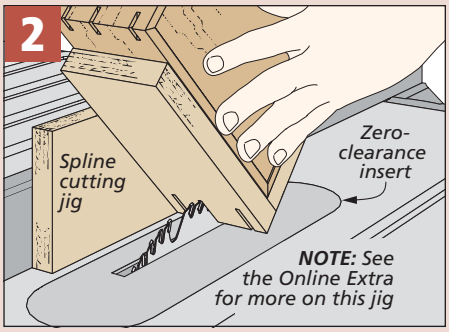

Slots for Splines. I used a simple, shop-made jig to hold the box at a 45° angle while cutting the slots for the splines.

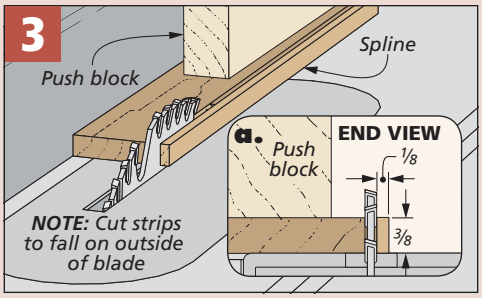

Ripping Thin Strips. Using a push block to safely hold the blank, rip several 1/8"-thick strips to use for splines.

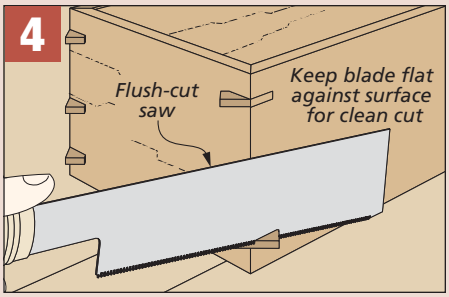

Trimming the Splines. A Japanese flush-cut saw works great for trimming the waste from the splines. Then plane or sand the surface.

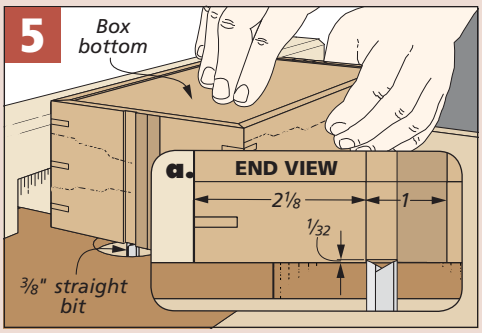

Routing the Channel. Rout the channel for the inlay on the sides first, then rout the top edge of the sides to hold the end of the handle.

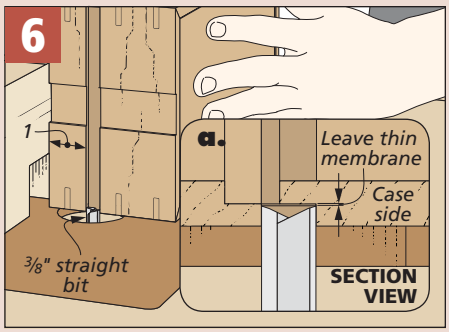

Separating the Lid. To separate the lid, set the router bit height just a hair lower than half the stock thickness.

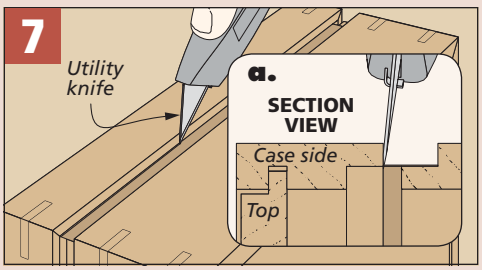

Final Trim. There should be a very thin strip remaining after routing the groove. Simply cut through it with a utility knife.

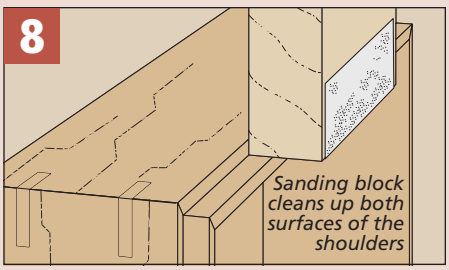

Sanding. Wrap a piece of 220-grit sandpaper over a square-sided block to clean up the shoulders for a good fit.

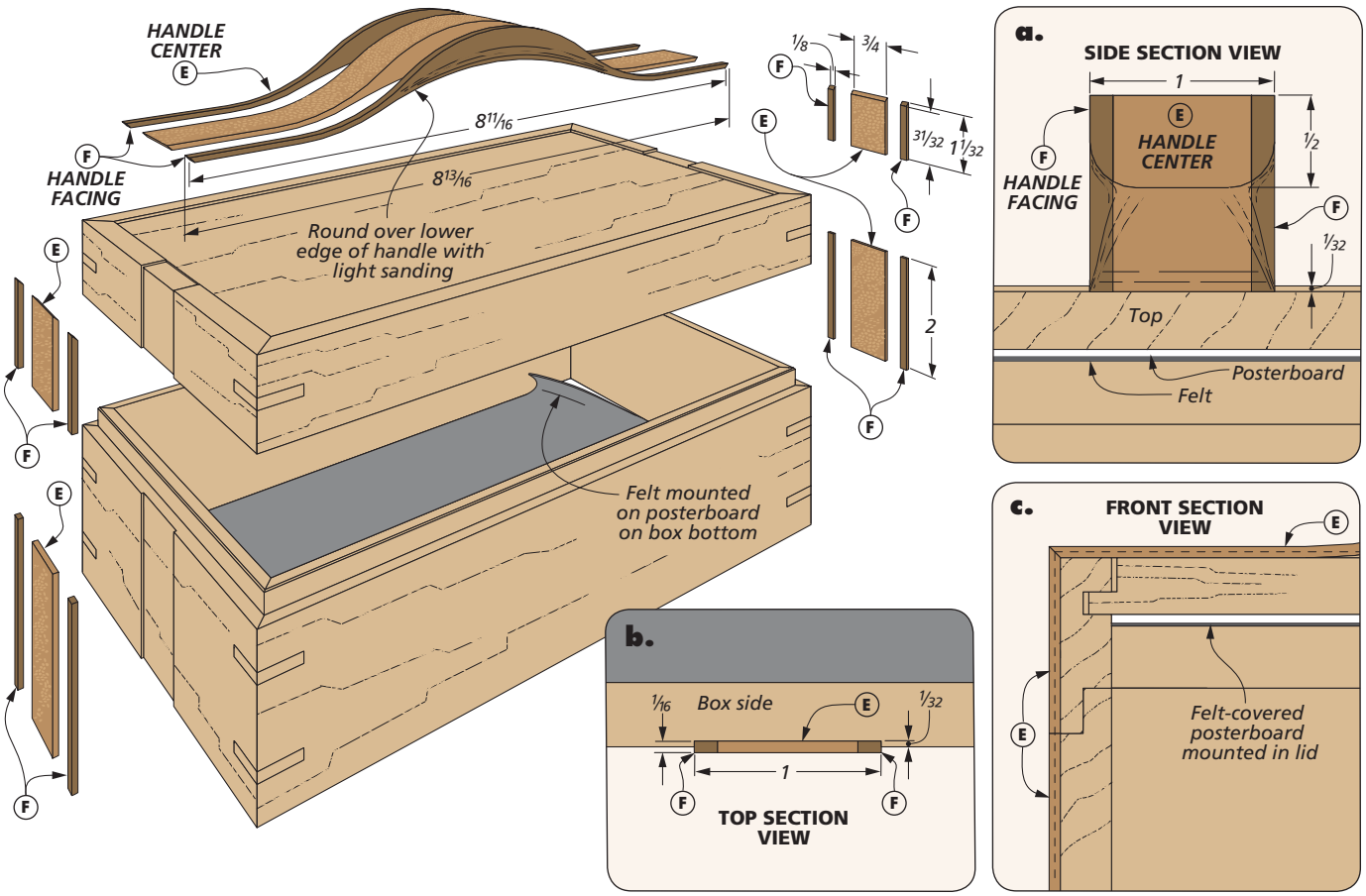

adding the **Ribbon Handle**

With the basic box assembled and sanded, it's time to turn your attention to the handle. For this box, I made a "ribbon" handle that runs across the top with a matching inlay going down both sides. As you can see in the main drawing above, the handle is a lamination of two different hardwoods.

While the handle is glued directly to the top, the ends of the handle and the side ribbons fit into the channel created on the sides. The thin strips that run down the sides might look difficult to laminate, but don't worry, you'll cut all the pieces from a single, larger laminated blank.

GLUE UP THE LAMINATED BLANK. The lacewood and wenge combined with the gentle curve in the handle really give the box a distinctive look. You may want to experiment with different woods from your own scrap pile to find a combination that complements the stock you used for the box. You'll need a 3/4"-thick piece for the center and two 1/8"-thick pieces for the facing. Just keep in mind that the thickness of the finished blank needs to match the channel you routed earlier. It's a good idea to glue up an oversized blank (about 16" long) so you can trim it to final size after cleaning up the glue squeezeout.

I started by cutting the handle pieces to size. Then I glued them together, adding a piece of tape along one edge. The tape helps prevent the pieces from shifting under clamping pressure. Another benefit is that it forces most of the glue to squeeze out on the opposite edge. That makes cleaning it up much easier.

FULL-SIZE HANDLE PATTERN

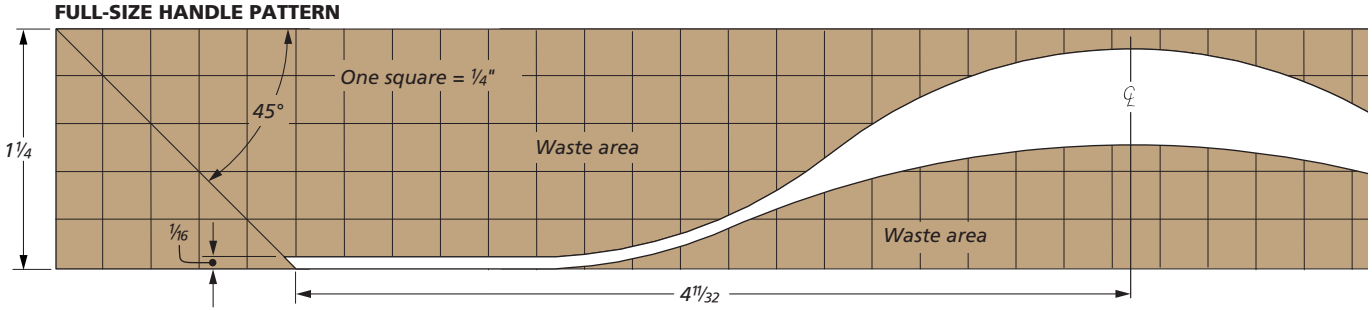

It's also a good idea to use a caul on both sides of the blank when you add the clamps.

CUTTING THE HANDLE. Once the glue has dried, you'll need to clean up the laminated blank. You can use a block plane to smooth the edge you taped earlier (Figure 1). Then head to the table saw and trim the opposite edge square and parallel.

Next, make a copy of the pattern on the opposite page and attach it to the blank with spray adhesive. The pattern makes it easy to cut the blank to shape and position the miter cuts on each end. I cut the miters first to guarantee a good fit for the joints where the handle will meet the side strips. It would be very difficult to accurately miter the thin pieces separately.

Once you've mitered the ends, use the pattern to cut out the shape of the handle. I cut it out at the band saw and cleaned up the surfaces using a sanding drum (Figures 3 and 4). I also rounded over the sharp edges by hand sanding to provide a more comfortable grip.

The cutoff from the handle blank is used to make the side ribbons. Figure 5 shows how you can get all four pieces from the blank, using the mitered ends to mate with the handle. After cutting them out, you'll need to sand or scrape them to remove the saw marks and then cut them to final length.

All that remains to complete the box is to glue the pieces in place (Figure 6) and then install the felt-covered posterboard lining. Finding a home for this beautiful box shouldn't be a problem.

How-To: Make the Laminated Handle

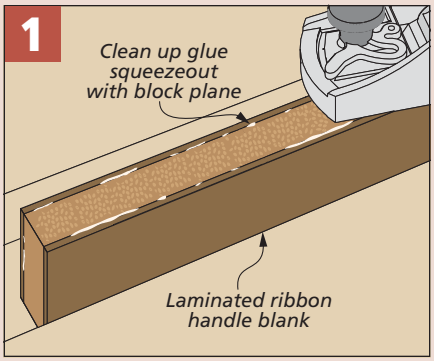

Cleaning Up. After removing the tape from the edge of the blank, a couple passes with a block plane will clean up the edge.

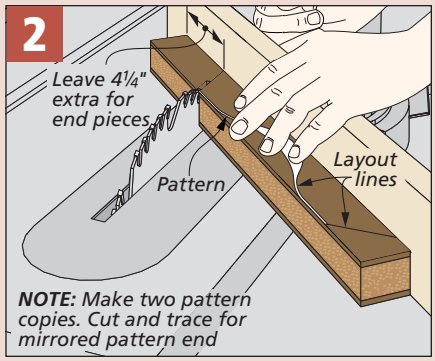

Cut the Miters. With the pattern glued to the blank, you can easily line up the miter cuts on each end.

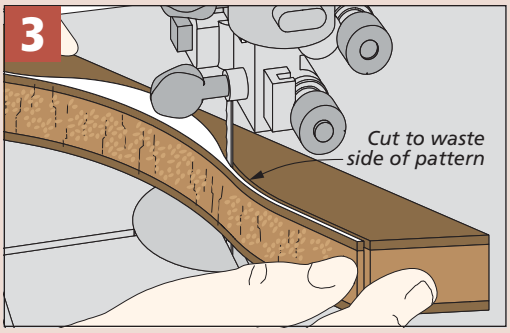

Cutting the Curved Handle. Cut the handle to rough shape at the band saw, making sure to keep the cut on the waste side of the layout line.

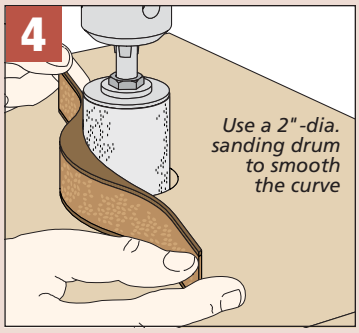

Drum Sanding. A sanding drum makes short work of smoothing the saw marks and shaping the handle.

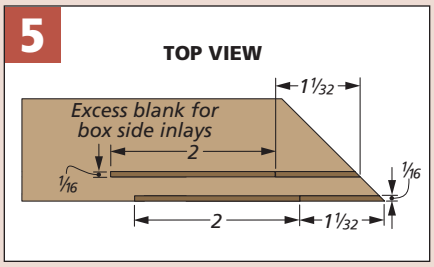

Cutting Side Inlays. Using the excess from the laminated blank, rip the thin strips for the side inlays at the band saw.

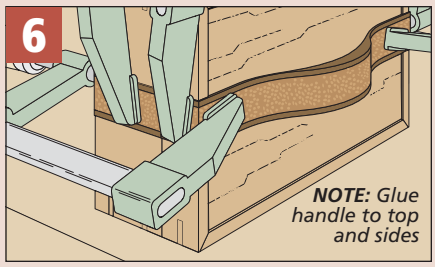

Assembly. Since the inlays fit in the channel you routed earlier, assembly is just a matter of adding glue and gentle pressure.

MATERIALS, SUPPLIES & CUTTING DIAGRAM

A	Front/Back (2)	5/16 x 3 3/8 - 8 3/4
B	Sides (2)	5/16 x 3 3/8 - 5 1/4
C	Top/Bottom (2)	5/16 x 4 7/8 - 8 3/8
D	Splines (12)	1/8 x 3/8 - 1
E	Handle Blank Center (1)	3/4 x 1 1/4 - 16 rgh.
F	Handle Blank Facing (2)	1/8 x 1 1/4 - 16 rgh.

- (2) Posterboard Backing (Cut to Fit)
- (3) Black Felt (Cut to Fit)

1/2" x 5 1/2" - 48" Ash (1.8 Sq. Ft.)

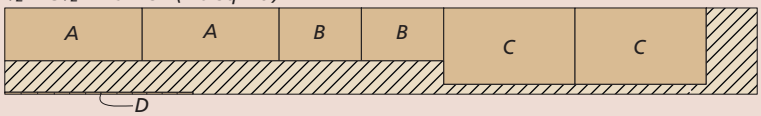

***NOTE:** A, B, and, C are planed to 5/16" thick*

Also needed: Stock for handle blank (parts E & F)

six-candle Centerpiece

You can build this beautiful candle stand in just a few hours in the shop using pieces from the scrap bin and a few simple table saw techniques.

Making a candle stand is a great way to use small, prized pieces of figured or exotic wood. The one shown in the photo above is a good example. It gave me the opportunity to combine a nice piece of maple I'd been saving with some shorter cutoffs of cocobolo. And small projects like this also offer a great chance to showcase your joinery and finishing skills. It will get a lot of scrutiny because it invites close inspection, so it requires a lot of attention to detail.

Don't get me wrong, making this centerpiece doesn't involve complicated joinery or construction techniques. But it's the kind of project where even the smallest details — like sanding the end grain of the feet until it's almost polished — are very noticeable. And spending a little extra time sanding the finish between coats to get a perfectly smooth surface will also make a big difference. The result will be a welcome addition to any home.

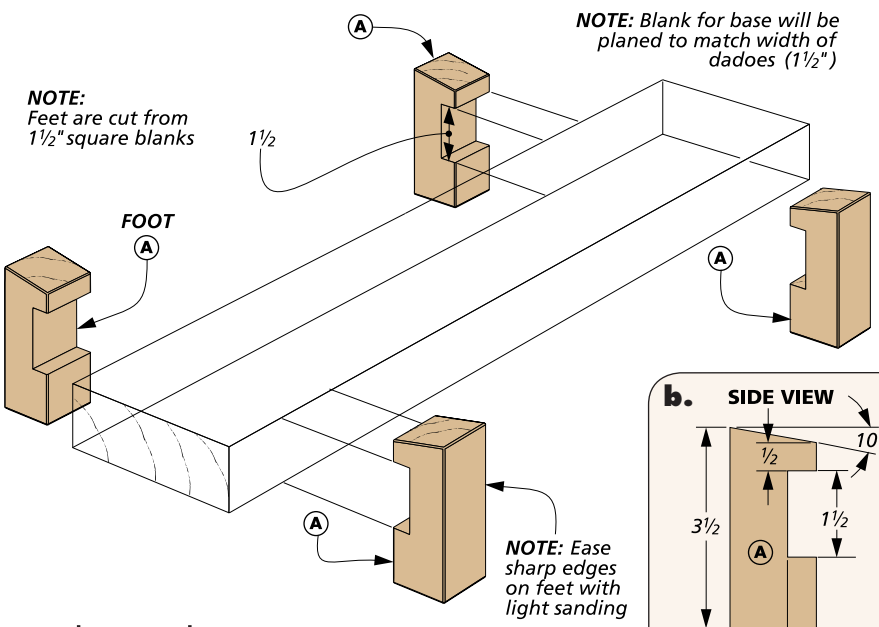

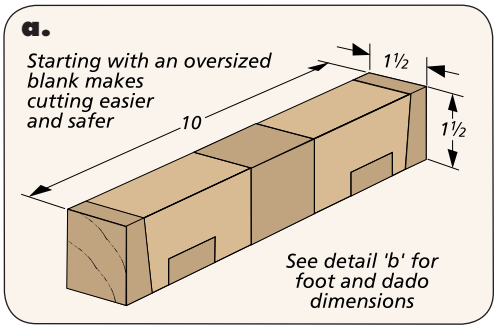

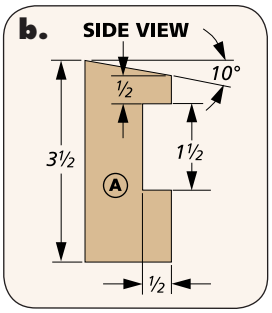

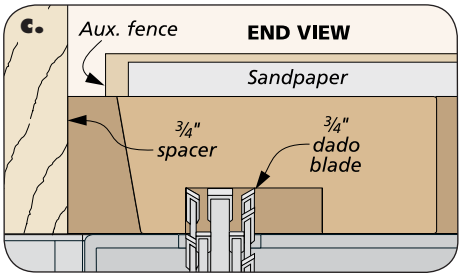

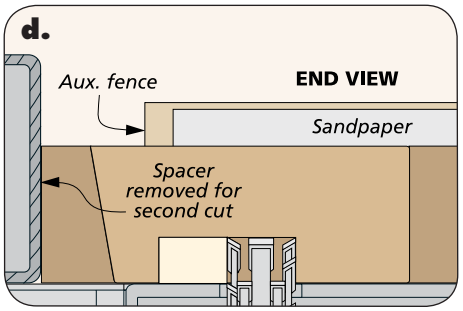

making the **Feet**

One of the notable things about this project is its simplicity. It's just a base drilled to accept six glass candle holders with four contrasting hardwood feet.

As you can see in the drawings at right, the feet have a 1½" wide dado, so you'll need to cut it in two passes at the table saw (details 'c' and 'd'). Later, you can plane the blank for the base to fit the dadoes.

CUT THE DADOES. To make the dado cuts in the feet, I started with a couple of long blanks (detail 'a'). This way, you'll have plenty to hold on to when using the miter gauge to guide the workpiece.

I attached an auxiliary fence to the miter gauge to support the cuts. I also glued a piece of sandpaper to the face of the fence to prevent the blanks from "creeping" out of position. Then, with the dado blade set to ¾" wide, you can make the first cut using a ¾" spacer block clamped to the rip fence.

Now it's just a matter of rotating the blank end-for-end and repeating the cut on the other end. Then remove the spacer block to make the second cut. This method guarantees an evenly matched set of dadoes, exactly 1½" wide.

COMPLETING THE FEET. With the dado cuts complete, all you need to do is cut the bevel on the ends and cut the feet to length (see box below.)

I started by installing a good crosscut blade on the table saw to get the smoothest cut possible. Then I set the angle to 10° to make the bevel cut on each end. Finally, you can return the blade to 90° and use a stop block clamped to your auxiliary miter fence to cut the feet to length.

How-To: Cut the Feet

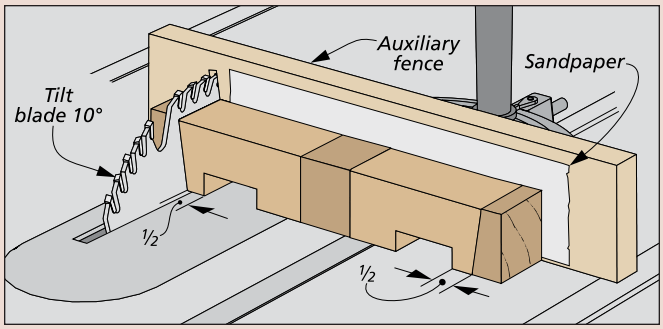

Bevel the Ends. With an auxiliary fence on the miter gauge and a strip of sandpaper on the face to prevent the piece from slipping, cut a 10° bevel on each end of the oversized blank.

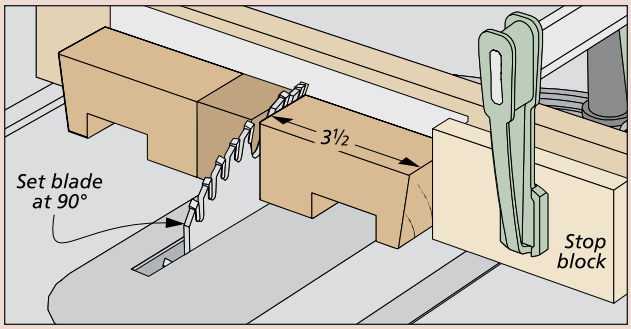

Cut to Length. Now reset the blade to 90° and clamp a stop block to the fence to mark the finished length. The stop block will guarantee the feet are cut to the same length.

Candle Cups. It's a good idea to buy the glass candle cups for the project before you begin. This way, you can size the holes for a perfect fit.

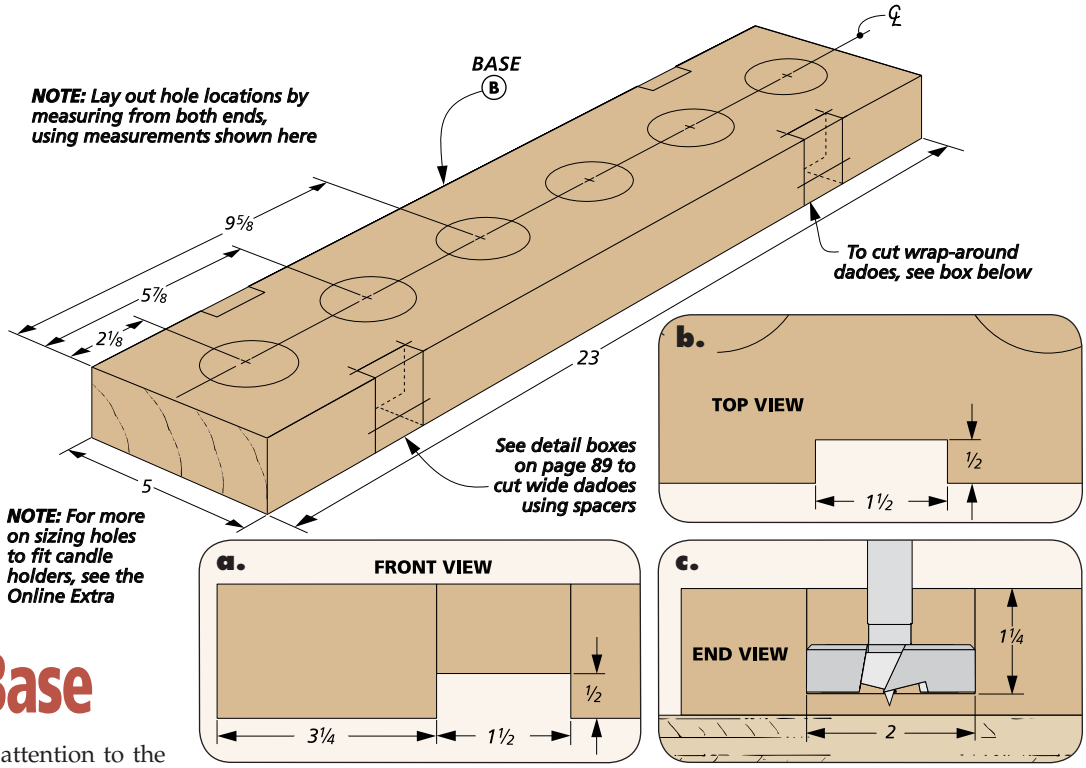

making the **Base**

You can now turn your attention to the base of the centerpiece. You'll start with a solid blank, drill holes for the candles, make the joinery and bevel cuts, then rip it in half to add the decorative gap. Two stretchers in dadoes on the bottom of the base tie the two halves together.

DRILL THE HOLES. After jointing and planing the blank square, the next step is to drill the six holes for the candles. To get started, I marked the centerline of the blank. Then I marked the location of the holes and drilled them using a 2"-dia. Forstner bit. If your candles are a different size, or you don't have a large Forstner bit, refer to *WoodsmithSpecials.com* for an alternative technique using a router.

WIDE DADOES. With the holes drilled, you'll need to move to the table saw with a dado blade installed and set to make a ¾"-wide cut. I used the same setup to cut the "wrap-around" dado on the stand as I used for the feet. The box below shows the steps for making these wide dado cuts.

Using an auxiliary fence on the miter gauge and a spacer on the rip fence, make the first cut on the edge of the blank. Then rotate it to cut the opposite edge. You'll need to lay the piece flat to cut the bottom dado. Finally, remove the spacer block and repeat the cuts on the opposite end of the blank to match the 1½" width of the feet.

THE BEVEL CUTS. Now you're ready to make the bevel cuts on the ends and sides of the blank. After tilting the blade on the table saw 10°, I made the cuts on each end. To make the cuts on the sides, you'll use the same blade tilt setting. All you need to do is set the rip fence and rip the matching bevel on each side of the base.

How-To: Make a Wide "Wrap-around Dado"

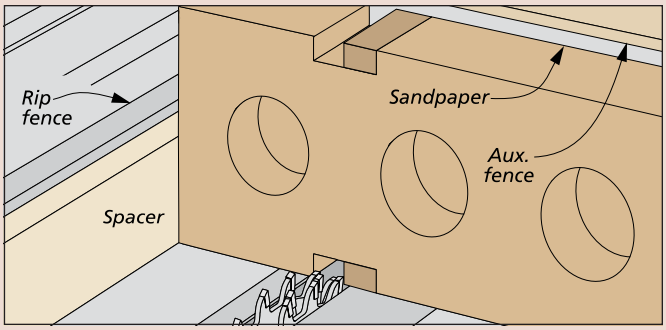

Dado the Edges. With a spacer on the table saw's rip fence and an auxiliary fence on the miter gauge, set the rip fence to cut the first (outside) dadoes in both edges.

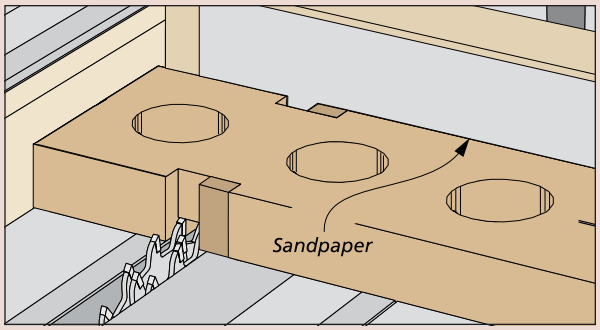

Cut the Bottom Dado. After cutting both edges, lay the base flat and cut the bottom dado. To finish the cuts, remove the spacer from the rip fence and repeat the procedure.

SPLIT THE BASE. With the joinery cut, the holes drilled, and the sides and ends beveled, the last step in preparing the base is to rip it down the center. Since you already have the centerline established from drilling the candle holes, you just need to return the saw blade to 90° and make the cut.

THE STRETCHERS. Two stretchers are screwed to both halves of the base to hold them together. They fit into the dadoes on the bottom of the base. You can cut them to size at the table saw. Then, you'll need to drill and countersink holes for the screws before moving on to assembly.

ASSEMBLY. Now that you've completed the parts, the assembly should go pretty smoothly. I started by cutting a ⅛"-thick spacer to place between the two halves of the base to hold them apart. Then, after screwing the stretchers in place, I fit the legs to the base with glue and clamps.

SAND & FINISH. As I said earlier, this is a project that needs a really thorough sanding and a flawless finish. I took extra care to sand the end grain on the base and legs all the way to 320 grit. This yields a smooth finish and brings out the interesting end grain patterns. To complement the smooth surface, I chose to spray the piece with lacquer. It dries quickly and builds up a nice finish in a hurry.

The result is a striking piece that's at home in just about any setting. Whether you place it on your dining room table or on the fireplace mantel, this centerpiece is sure to look great.

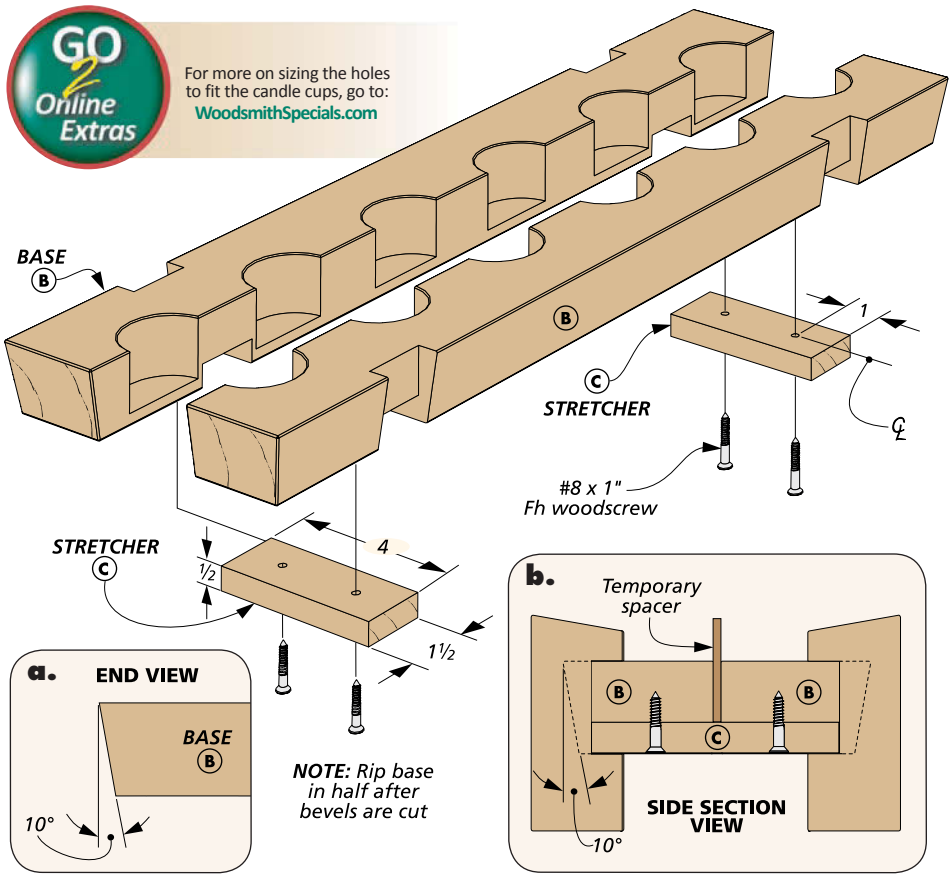

MATERIALS, SUPPLIES & CUTTING DIAGRAM

A	Feet (4)	1½ x 1½ - 3½
B	Base (1)	1½ x 5 - 23
C	Stretchers (2)	1½ x ½ - 4

- (4) #8 x 1" Fh Woodscrews
- (6) Glass votive candle cups w/candles

2"x 2"- 18" Cocobolo turning blank (0.6 Bd. Ft.)

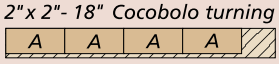

1½"x 6"- 24" Maple (2.0 Bd. Ft.)

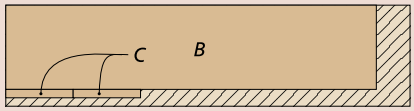

FINAL ASSEMBLY

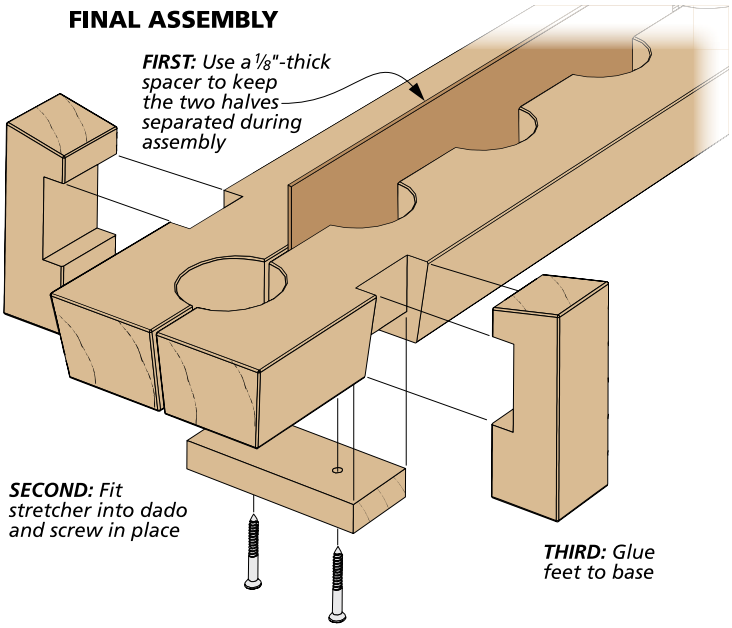

Shop Tip: Flat Feet

Flat on the Bottom. To get the bottoms of the feet perfectly flat, use some adhesive-backed, 120-grit sandpaper on a flat surface, like your table saw.

craftsman-style Clock

This mantel clock is small in size, but it's sure to be big in appeal.

A mantel clock in the Craftsman (or Arts & Crafts) style looks great in just about any setting. And the design shown in the main photo is a good example of the classic lines of that period. It also incorporates a hand-made, ceramic tile that reflects the traditional Arts & Crafts elements. Designers and builders of Craftsman homes and furniture often used highly stylized tile in their construction.

While I wanted to maintain a traditional look, I also took advantage of more modern conveniences, like a quartz clock movement. And though screws are used for some of the joints, you'll hide the screw holes by installing thin, end-grain plugs.

A plywood panel behind the front frame holds the clock movement and the tile. I made the unique face for the clock out of light-colored maple to contrast with the stained white oak. The four reference points on the face are also stained, end-grain white oak. Finally, a thin, plywood back panel is attached with screws to allow easy access to the movement.

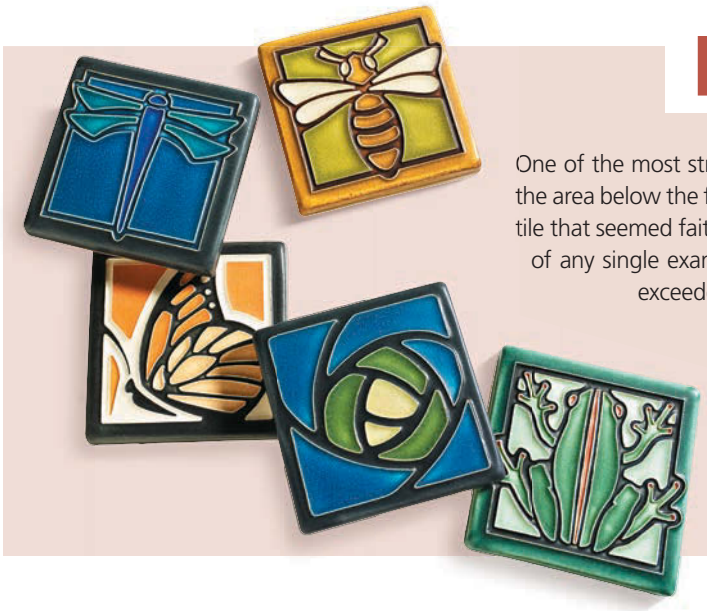

Hand Made: Tiles for all Tastes

One of the most striking features of this clock is the decorative art tile framed in the area below the face. During the design phase of this project, I wanted to find a tile that seemed faithful to the traditional Arts & Crafts style, but not a direct copy of any single example. With just a little searching, I found a tile company that exceeded my expectations.

Motawi Tileworks, a small *Michigan* company, produces a diverse line of hand-made tile. The founder, Nawal Motawi started the company after doing extensive research on tile designs, glazes, and glazing techniques of the master craftsmen and artisans from the Arts & Crafts period. Today, *Motawi Tileworks* offers some of the finest quality tile available. Check out the designs at *motawi.com*.

FRONT FRAME

The tapered front frame sets the style for the clock. It consists of two tapered stiles joined by three rails, each a different width. The stiles form the borders of the upper and lower fields that contain the clock face and the tile.

Before getting started, you might want to take a look at the materials list on page 97. I mention this because the clock requires three different thicknesses of riftsawn white oak. It's a good idea to rough out those pieces up front and get all of the planing done at one time. Another helpful hint is to make sure to mill a little extra stock of each thickness for tool setups and spare parts in case you make a mistake.

STILES. The first thing to work on is the pair of stiles. As you can see in the drawing at right, I cut the mortises on both stiles while the blanks were still square. The left drawing in the box below shows how I drilled out the mortises first, using a Forstner bit in the drill press. After that, you can square them up using a chisel.

RAILS. Now you can move on to making the three rails. I started by cutting the blanks to final length. Then I ripped each one to its individual width. Now install a dado blade in the table saw and an auxiliary fence on the miter gauge. The right drawings below show how to cut the tenons. Details 'a' and 'b' give the dimensions of each rail and tenon.

EDGE PROFILES. At this point, it's time to head to the router table and rout the roundovers on the rails. Since the rails actually form frames for the clock face and tile, I just wanted to slightly round over the corners. An 1/8"-radius roundover bit does the job. Detail 'b,' above, shows which of the edges on each piece to rout.

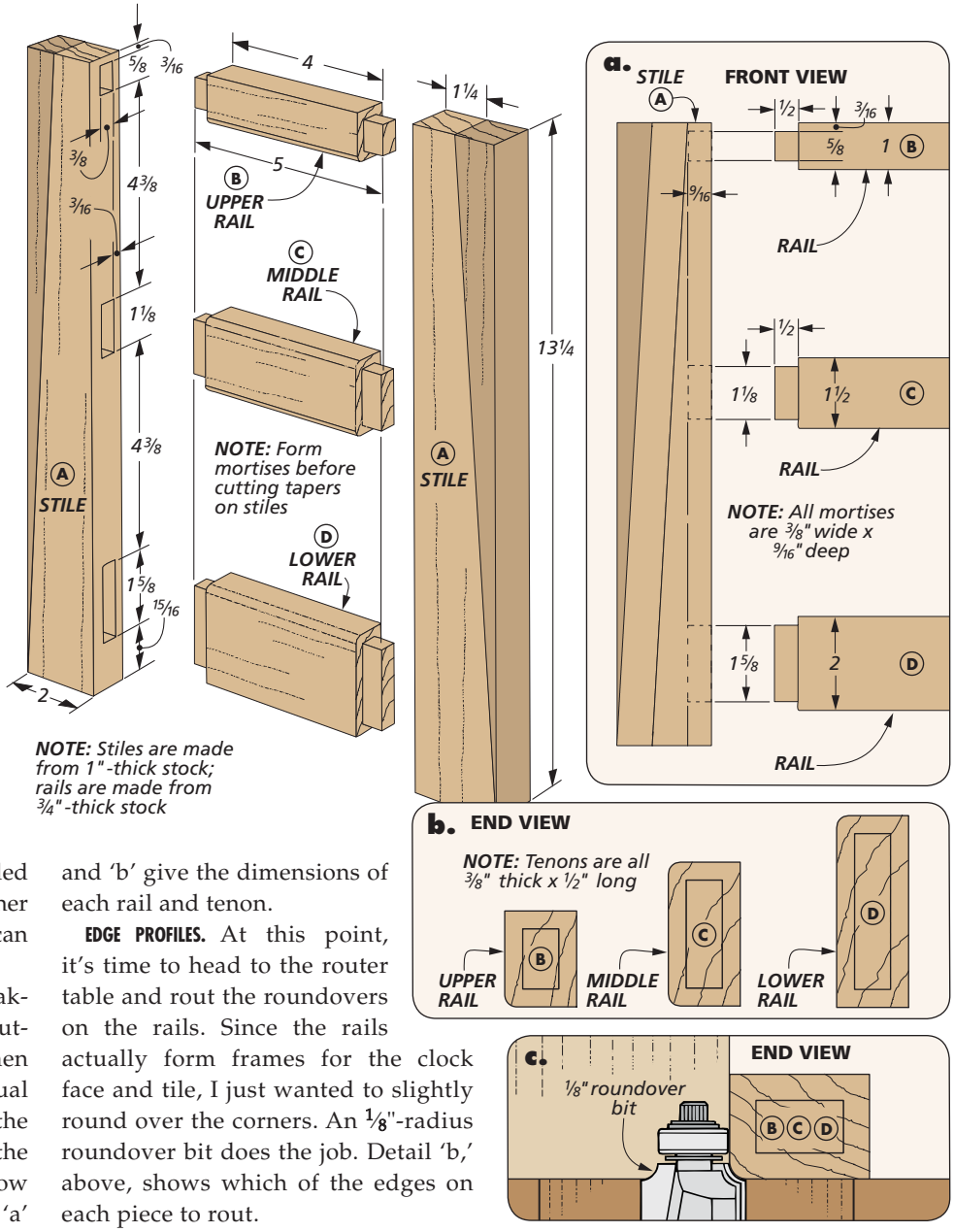

How-To: Make Mortises & Tenons

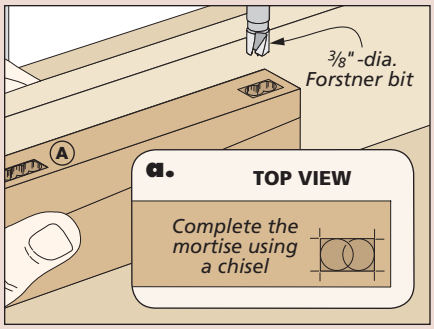

Drill Mortises. After laying out the size and location of each mortise, drill them out and square up the sides with a chisel.

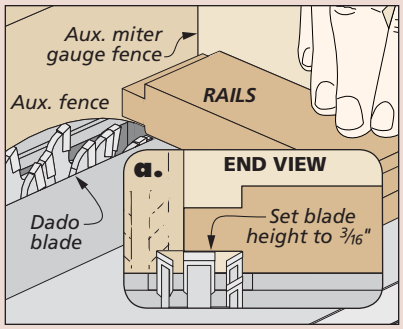

Cut the Cheeks. Bury part of the dado blade in an auxiliary rip fence and use a miter gauge to make the cheek cuts.

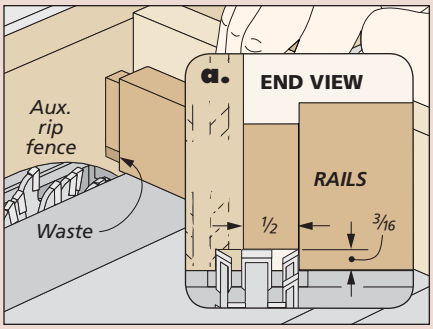

Then the Shoulders. You can use the same blade and fence setup to cut the shoulders of the tenons.

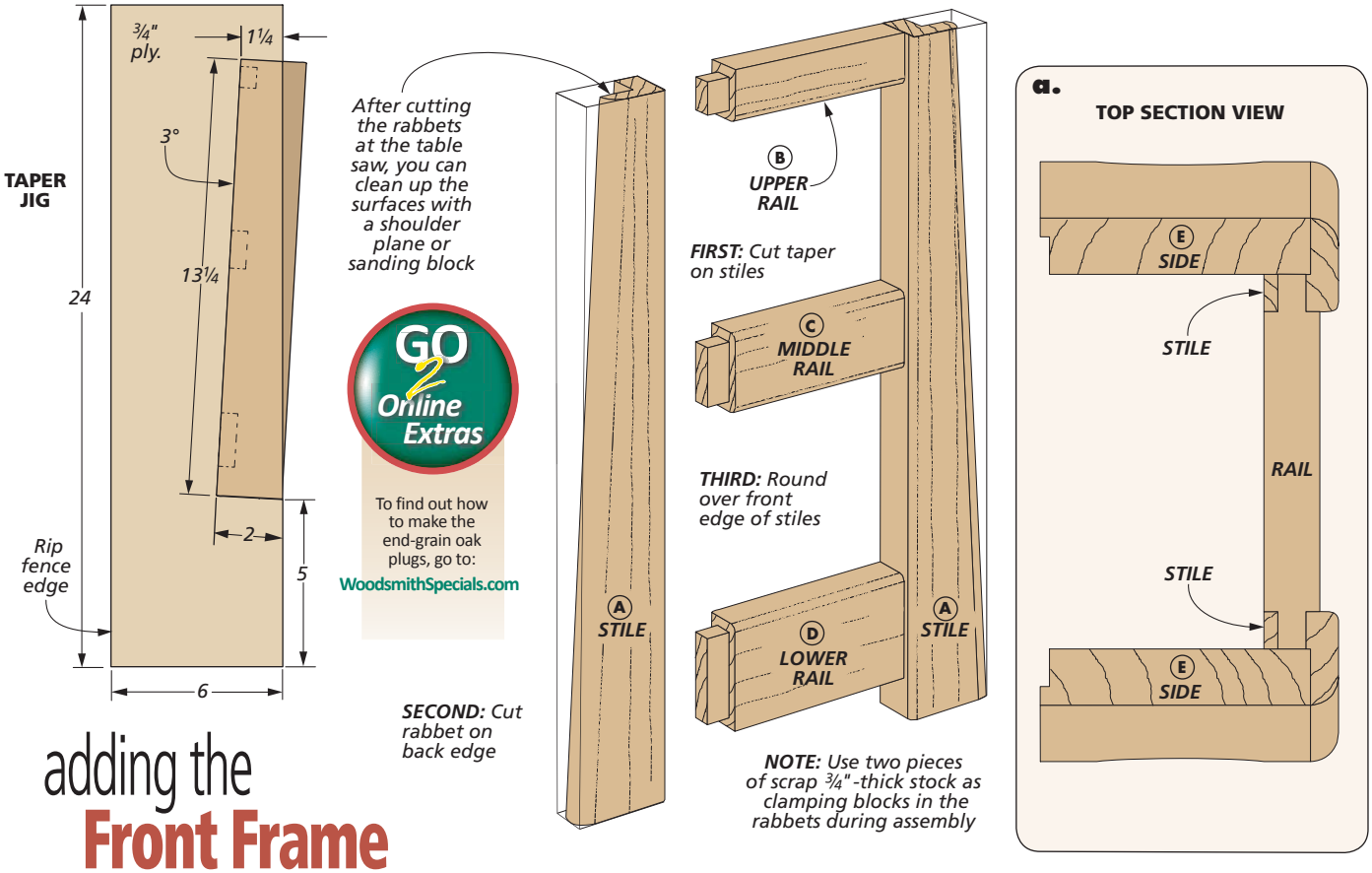

adding the Front Frame

After completing the joinery for the rails and stiles, there's still a little bit of work to do before assembling the front frame. The first order of business is to taper the stiles. Then you'll need to cut the rabbet on the back edges to hold the sides.

Finally, I added another, larger roundover to the outer edge of the stiles. The illustrations below show you the processes, but I'll cover a few things that aren't in the drawings.

CUT THE TAPERS. Cutting the tapered stiles looks like a challenge. But like many woodworking tasks, a jig makes it a breeze. The shop-made jig shown at left above is easy to make and you can count on it to produce identical stiles.

It's just a piece of plywood with the desired final shape of the stiles cut out. You can make the jig by cutting out the waste at the band saw. Then, just clean it up with a little sanding and you're ready to go. All you need to do is place the stile in the jig with the mortises facing the fence and you can safely cut it to perfect shape (left drawing below).

RABBET. After you've finished the taper cuts, you're ready to cut the rabbet on the outside back edge of the stiles. The middle drawing shows the technique for this cut.

ROUNDOVER. Finish up the stiles for the clock by routing a roundover as shown in the right drawing below.

How-To: Complete the Stiles

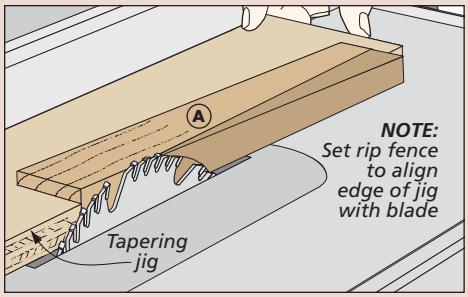

Taper the Stiles. With the stile fit firmly in the tapering jig, all you need to do is set the fence and make the cut.

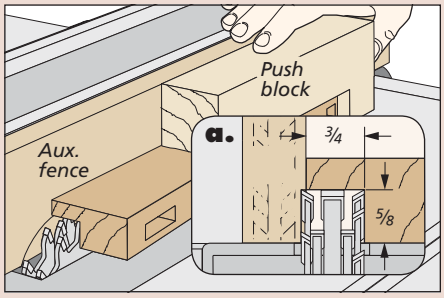

Rabbet. Set the dado blade to full width and install an auxiliary rip fence to cut the rabbet on the back edge of the stiles.

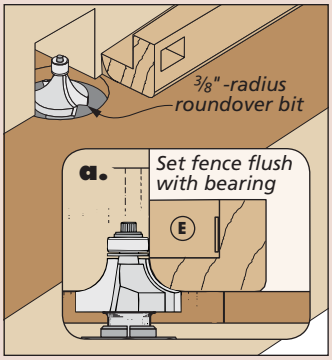

Soften the Edges. Round over the front outside edges of both stiles at the router table.

This softens the edge and the look of the clock's front face.

ASSEMBLY. Now that you've completed the work on the rails and stiles, you can assemble the frame. Just brush a little glue in the mortises and on the tenons. I used a couple pieces of ¾"-thick stock in the rabbets to act as clamping blocks during the glueup. This way, you can be sure to get a good glue bond by clamping across each joint.

SIDES. With the front frame complete, it's time to move on to the sides. The sides simply line up with the rabbets on the front frame.

I started by cutting the sides to final width. Then I cut the rabbet on the rear edge using a dado blade in the table saw. Finally, I installed a standard blade and tilted it to cut the bevel on the top and bottom edges of both pieces (left drawing, below).

CUT THE ARC. The decorative arc on the bottom edge of the sides is another traditional feature of Craftsman-style clocks. I marked the arc in pencil and then cut the shape at the band saw.

ASSEMBLE THE SIDES. At this point, I glued up the face frame and sides. When clamping the pieces together, check to make sure the beveled ends of the sides are flush with the top of the frame. This step helps to ensure a flat surface for the top.

THE TOP. The underside of the top is beveled to lighten the look, then attached to the sides with screws. After assembly, I covered the screw holes with small squares of end grain oak.

First, cut the top to size from ½"-thick stock. Then tilt the blade on the table saw 10° and use a tall fence to cut the bevel on the underside of the blank. The right drawing below demonstrates how to do this.

Now mark the locations of the screw holes on the top and drill the holes at the drill press. Then, cut the shallow mortises for the caps using a chisel. The Online Extra shows how to make the end grain oak plugs I used to cover the screw holes. After installing them, just sand them flush.

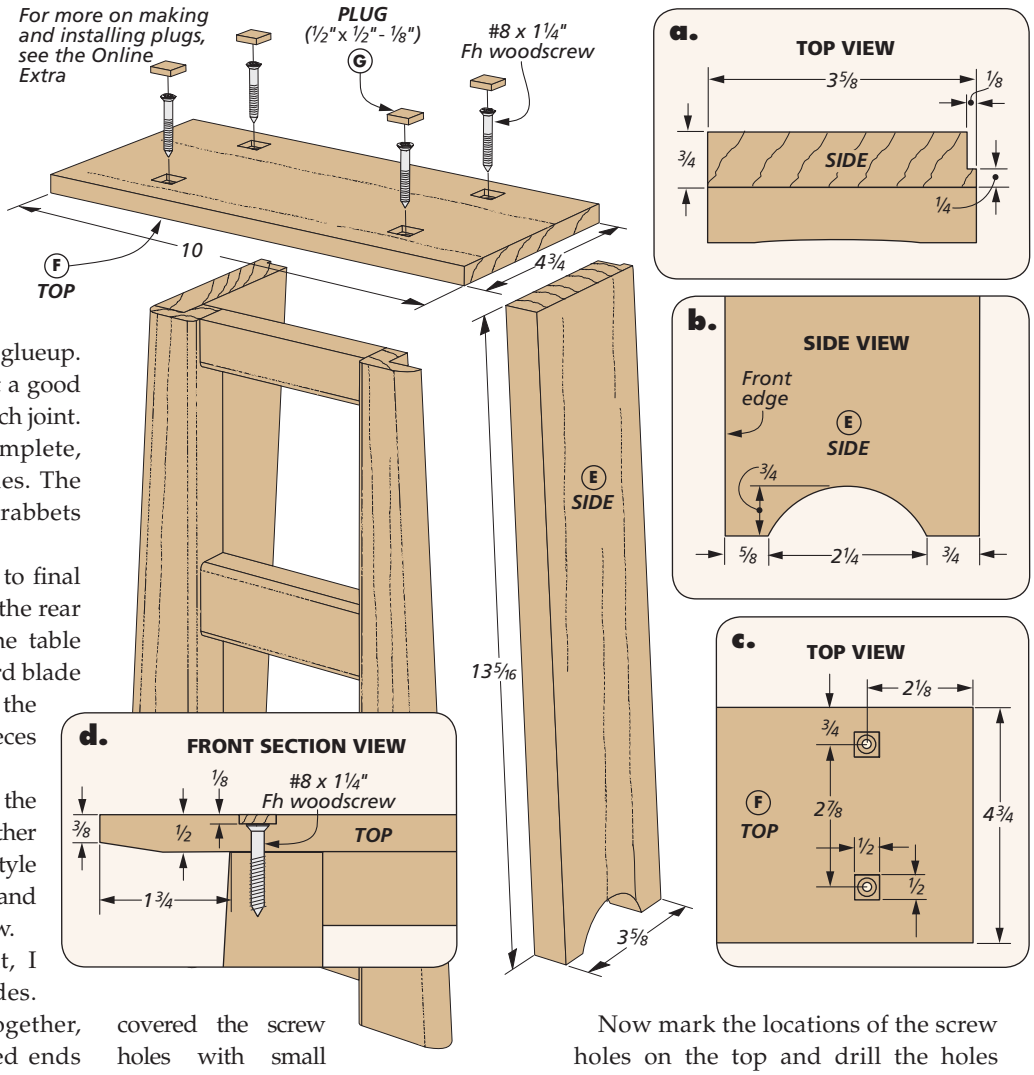

Sides & Top

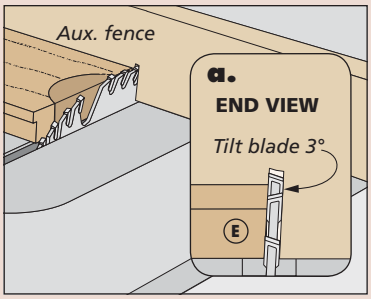

Bevel Cuts. Bevel the top and bottom edges of the sides using the miter gauge and auxiliary fence.

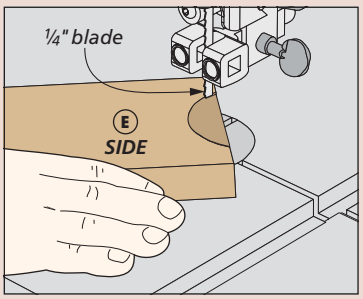

Cut the Arc. After marking the arc using a compass, go to the band saw to make the cut.

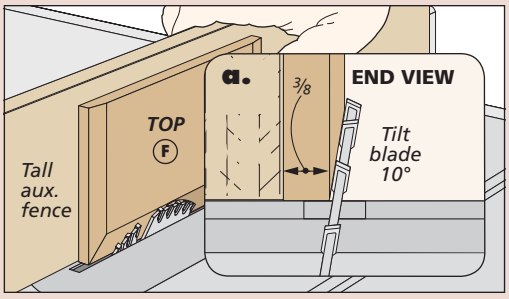

Bevel the Top. You can cut the 8° bevels on the top at the table saw by installing a tall auxiliary fence on the rip fence and tilting the blade.

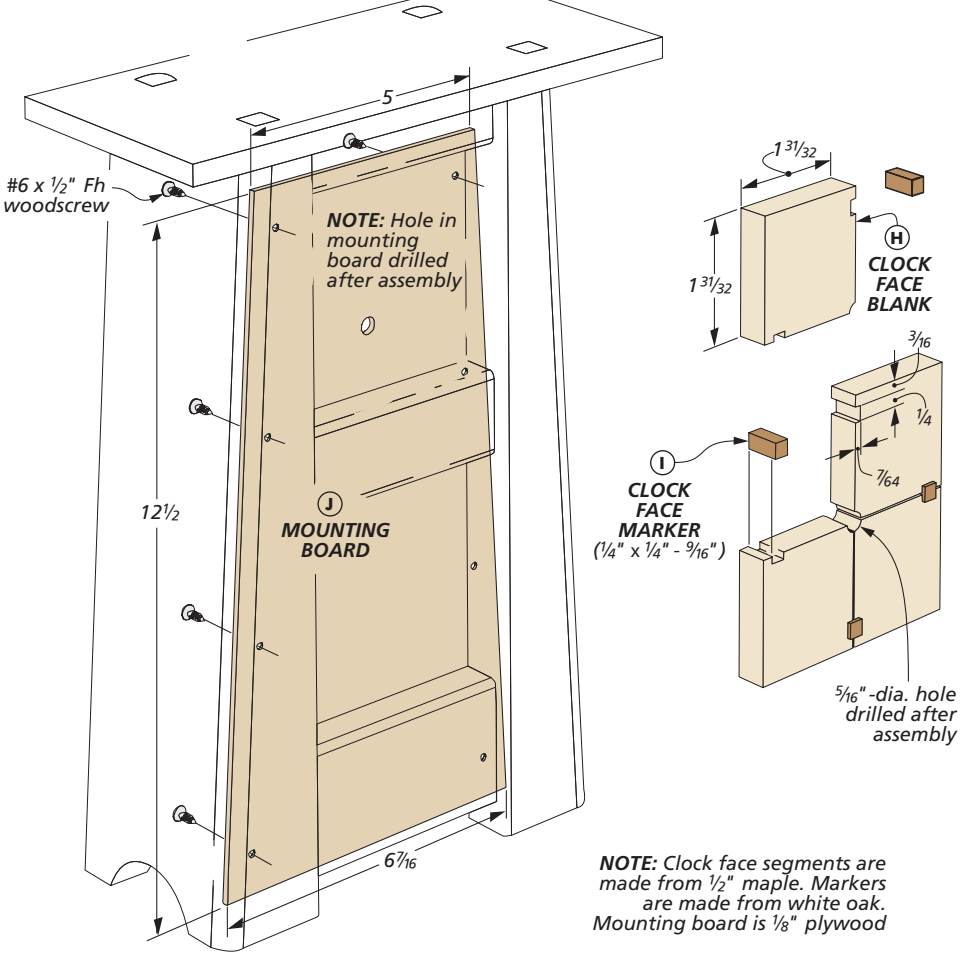

NOTE: Clock face segments are made from ½" maple. Markers are made from white oak. Mounting board is ⅛" plywood

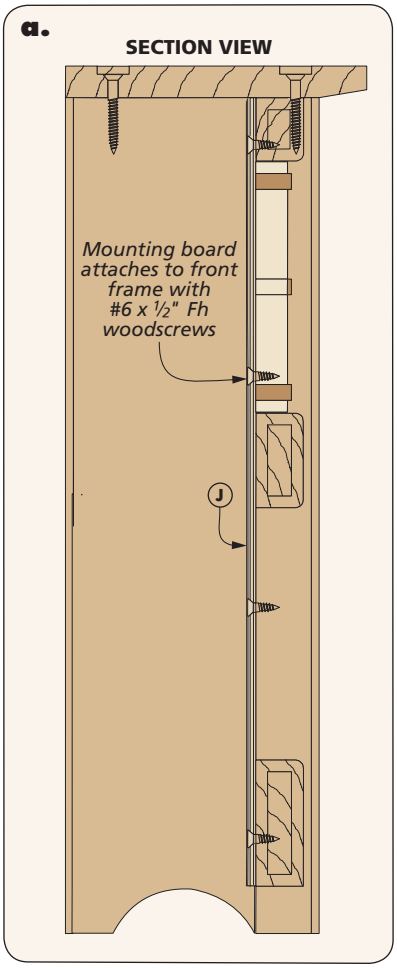

completing the **Clock**

With the case assembled, next up is adding the mounting board. This piece holds the clock movement and face, as well as the decorative tile. After that, you'll assemble the face and markers, install the clock movement, and complete the clock by adding the plywood back with screws.

MOUNTING BOARD. You can start by laying out the shape of the mounting board and cutting it to final size. Then drill eight ⅛"-dia. screw holes for attaching it to the back of the frame.

CLOCK FACE. At this point, you're ready to make the clock face. The drawings in the box below walk you through the steps. The face is made from four pieces of ½"-thick maple separated by four small, square markers. I chose to use four pieces rather than one larger, single piece in order to create shadow lines in the face. When you assemble the four pieces and install the clock face markers, the resulting gap between the blocks creates a unique look.

How-To: Make the Clock Face

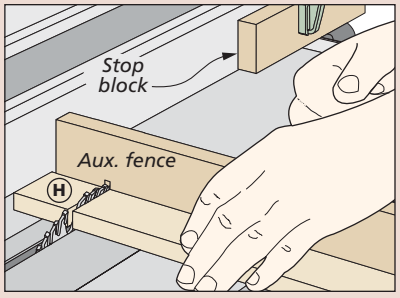

Square Segments. I attached a stop block to the rip fence to set the length for cutting the individual blanks.

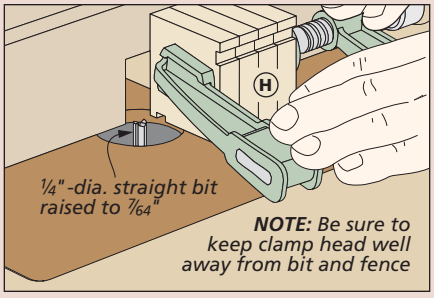

Rout the Notches. A clamp holds the blanks securely while you rout the notches using a straight bit.

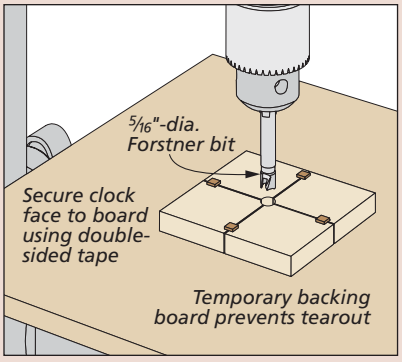

Drilling the Face. After assembling the clock face, attach it to a backer board to drill the hole for the stem.

You can begin by cutting four maple blanks to equal size (left drawing below). Then, head over to the router table to rout the notches for the markers. Clamp the blanks together and install a 1/4"-dia. straight bit in the router table. After routing the first notch, move the clamp, flip the blanks and rout the other notch.

CLOCK FACE MARKERS. The four face markers are simply narrow pieces of oak that you'll stain to contrast with the maple. An easy way to make them is to rip a 1/4" x 1/4" strip of oak stock. Then, use a hand saw to cut the face markers to length.

ASSEMBLE THE FACE. After staining the markers, you can assemble the four face pieces by gluing the markers in the notches. When the glue dries, temporarily mount it to a backer board using double-sided tape and drill the center hole (right drawing at the bottom of the opposite page).

The most reliable way to do this is to install a 1/16"-dia. bit in the drill press. Lower the bit and center the intersection of the four face pieces directly under it. Now, you can be sure the hole you drill with a 5/16"-dia. bit is centered.

STAIN & FINISH. At this point, I stained the case. When the stain dries, you can add a clear finish to the case and the maple face before moving on to the final assembly.

MOUNTING THE CLOCK. The next step is to install the clock face on the mounting board. For this, I screwed the mounting board in position and applied a little glue to the back of the clock face. Then all you need to do is fit the face into the opening in the frame and use a caul on each side to clamp the face to the board. When the glue dries, drill the center hole through the mounting board and install the movement (detail 'a'). After trimming them to fit the clock face, install the hands.

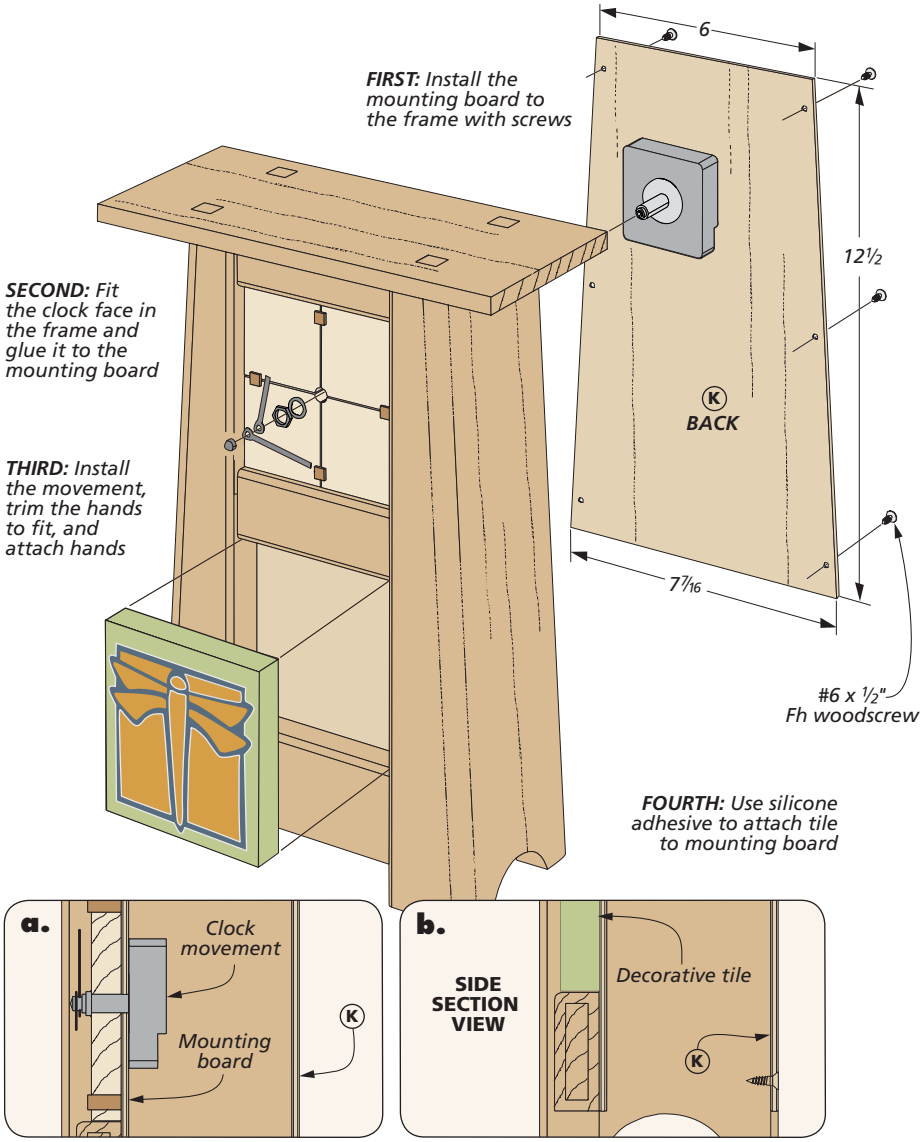

FINAL ASSEMBLY. Now you can attach the tile to the mounting board with a couple beads of silicone adhesive. I completed the clock by attaching the back. All that remains now is to find the perfect spot for the clock.

MATERIALS, SUPPLIES & CUTTING DIAGRAM

A	Stiles (2)	1 x 2 - 13 1/4	**G**	Plugs (4)	1/8 x 1/2 - 1/2
B	Upper Rail (1)	3/4 x 1 - 5	**H**	Clock Faces (4)	1/2 x 1 31/32 - 1 31/32
C	Middle Rail (1)	3/4 x 1 1/2 - 5	**I**	Clock Face Markers (4)	1/4 x 1/4 - 9/16
D	Lower Rail (1)	3/4 x 2 - 5	**J**	Mounting Board (1)	1/8 ply. - 6 7/16 x 12 1/2
E	Sides (2)	3/4 x 3 5/8 - 13 5/16	**K**	Back (1)	1/8 ply. - 7 7/16 x 12 1/2
F	Top (1)	1/2 x 4 3/4 - 10			

- (1) Push-On Quartz Movement
- (1 pr.) Clock Hands
- (1) 4" x 4" Decorative Tile
- (14) #6 x 1/2" Fh Woodscrews
- (4) #8 x 1 1/4" Fh Woodscrews

1" x 8" - 60" Riftsawn White Oak (4.2 Bd. Ft.)

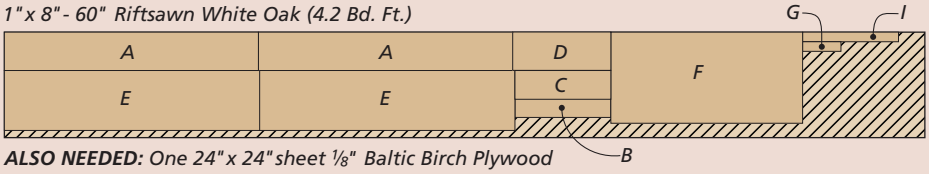

1/2" x 4" - 12" Maple (.3 Sq. Ft.)

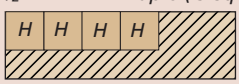

***NOTE:** Parts B, C, D, and E planed to 3/4" thick; Part F planed to 1/2" thick*

***ALSO NEEDED:** One 24" x 24" sheet 1/8" Baltic Birch Plywood*

The Best of Woodsmith Shop Sources

MAIL ORDER SOURCES

amazon.com

Benjamin Moore
855-724-6802
benjaminmoore.com

General Finishes
800-783-6050
generalfinishes.com

Horton Brasses
800-754-9127
horton-brasses.com

Klockit
800-556-2548
klockit.com

Lee Valley
800-871-8158
leevalley.com

McFeely's
800-443-7937
mcfeelys.com

Motawi Tileworks
734-213-0017
motawi.com

Osborne Wood Products
800-849-8876
osbornewood.com

Rockler
800-279-4441
rockler.com

Rust-Oleum (Varathane)
800-323-3584
rustoleum.com

Most of the supplies you'll need for projects in this book are available at hardware stores or home centers. For specific products or hard-to-find items, take a look at the sources listed here.

Retailers will periodically discontinue some items, so gather all the hardware that you need before you get started on your project. You can always adjust dimensions or drill different-sized holes to suit your hardware.

LIBRARY TABLE (P. 6)

- **Rockler**

Figure-Eight Fasteners 21650

- **Lee Valley**

Bail Pull 01A28.40

- **Amazon**

Two-Flute Ogee Bit ...B000P4SF12

To finish the table, we used *Varathane's Early American* wood stain to further enhance the Craftsman look.

CAMPAIGN CHEST (P. 16)

- **Rockler**

Mahogany Veneer 37328
Stem Bumpers 28373

- **Lee Valley**

Brass Corners 00A17.02
Drawer Handles 00A19.02
Case Handles 00A19.03

FARMHOUSE TABLES (P. 24)

- **McFeely's**

5/16"x 4" Hanger Bolts HB-3140

- **Rockler**

Tabletop Fasteners 34215

The turned legs are available from several online retailers including *Rockler* and *Osborne Wood Products*.

TV CABINET (P. 42)

- **Rockler**

Pocket Screws 38502

- **Lee Valley**

120° Hinges..... 00B15.24
32mm Pulls 01X43.22
96mm Pulls 01X43.24
16" Drawer Slides.....02K36.16

KEEPSAKE BOX (P. 52)

- **Lee Valley**

Hinge.....00D52.16
Hinge Screws.....91Z01.02X
Ball Chain.....00G40.01
Chain End Anchors.....00G42.15
Brass Chain Screws.....91Y04.02X

To finish the box, we wiped on a coat of *General Finishes' Seal-a-Cell* and then sprayed on two coats of lacquer.

DISPLAY CABINET (P. 60)

- **Rockler**

Pocket Lights 30225
Transformer 35189

- **Lee Valley**

Knobs w/Escutcheons 01A23.76

The 1/4"-thick beveled glass (with a 1" bevel) used for the doors was obtained from a local glass supplier. The mixture of equal parts *Java* and *Georgian Cherry* gel stain from *General Finishes* makes the poplar look like walnut. Sprayed lacquer completes the finish.

MUDROOM BENCH (P. 66)

We purchased the wicker baskets (9"x 12 1/4"x 15") for the bench at *Pier 1 Imports*.

The finish on the bench seat is three coats of lacquer to let the natural wood show through. The remainder of the bench is painted with *Benjamin Moore Paint* Corinthian White (OC-111).

STORAGE CENTER (P. 74)

- **Horton Brasses**

1 1/4"-dia. Maple Knobs.....WK-6
Drop-Leaf Table Hinges H-500

- **Rockler**

3/8"-dia. Magnet w/Washer ...32907

CANDLE CENTERPIECE (P. 88)

The glass candle holders and votive candles were purchased from a local craft store.

CRAFTSMAN CLOCK (P. 92)

- **Klockit**

Quartz Clock Movement 10004
Clock Hands (Black) 67943

- **Motawi Tileworks**

Dragonfly Tile (4x4).....Green

The clock was stained with *Varathane Oil Stain* (Mission Oak) and then sprayed with two coats of lacquer.

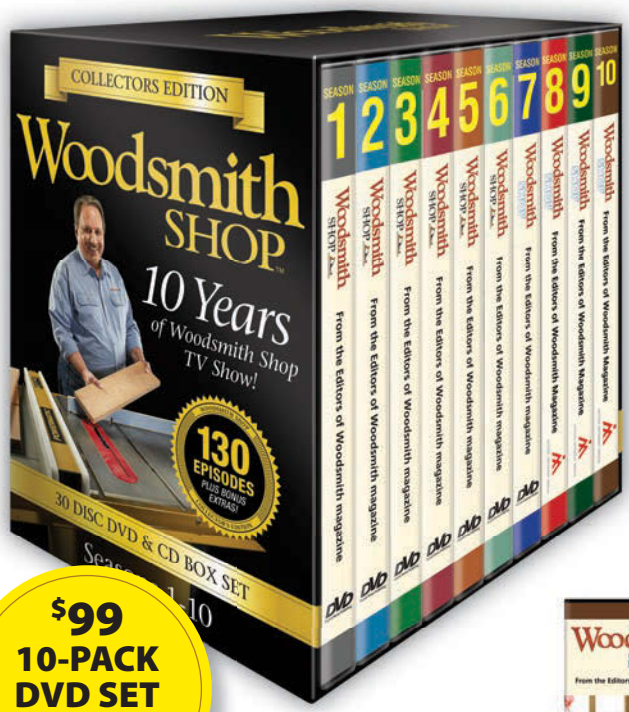

Woodsmith Shop Collectors Edition 10-Pack DVD Set!

THE COMPLETE TV SERIES SEASONS 1-10 ON DVD!

- All 10 TV Seasons
- 130 Full Episodes
- All Woodsmith Shop Plans
- Includes Special Storage Case

$99 10-PACK DVD SET
$79 Digital Online Only

Order Online Today & Get Instant Online Access to Every Episode!

Comes with the NEW *Woodsmith Shop* Season 10!

GET FREE SHIPPING (U.S.)

www.WoodsmithShop.com

beveled glass **Stop**

The glass panels in the doors of the display cabinet are secured with beveled glass stop. The bevel allows you to hold the brads at a more convenient angle as you drive them in place. And fortunately, this glass stop can be made entirely on the table saw.

To make the glass stop, I started with a 1½"-wide blank of 1"-thick stock. The first step is to tilt the saw blade to 45° and adjust the rip fence of your saw to cut a 3/16" chamfer on each edge of the blank, as shown in Figure 1.

Next, I set my rip fence to cut a kerf along the edge of the blank (Figure 2). By turning the workpiece around and end for end, you can cut all four kerfs with one setup.

Finally, I turned the blank on its side, repositioned my rip fence, and raised the blade to rip the glass stop free (Figure 3).

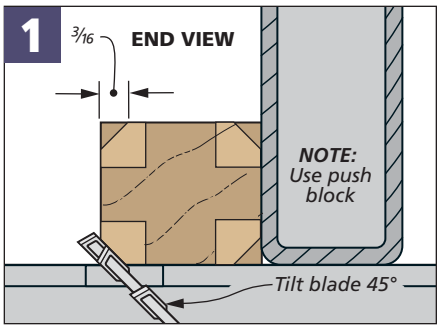

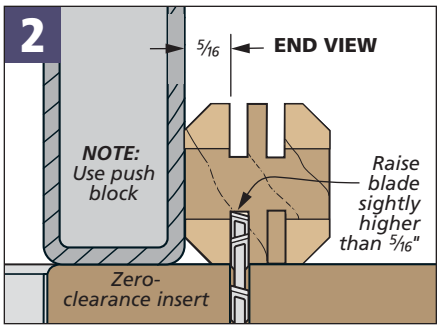

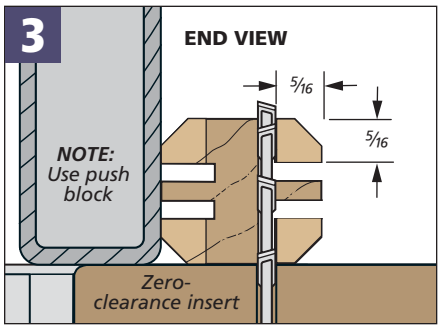

©2017 Cruz Bay Publishing, Inc. All Rights Reserved.

ONLINE EXTRAS

false **Tenons**

Making the false tenons for the library table posed a bit of a challenge. Because the false tenons are cut from end grain, you can't simply cut them from a long, narrow strip of wood.

The solution is a simple one. I planed down a blank to match the width of the mortise, and ripped it to match the length of the mortise. Then, using a sanding block, I rounded over the ends (Figure 1).

After cutting the false tenon free at the table saw (Figure 2), simply round over the ends of the blank again to make the next tenon.

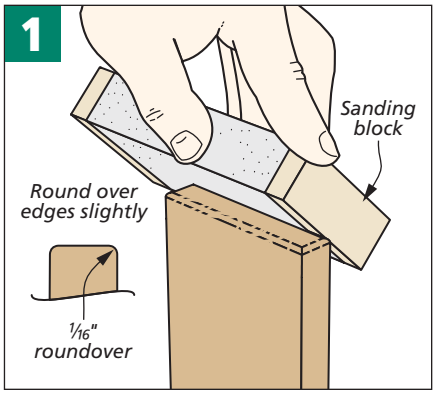

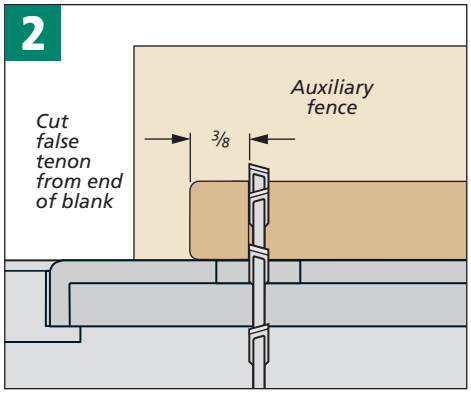

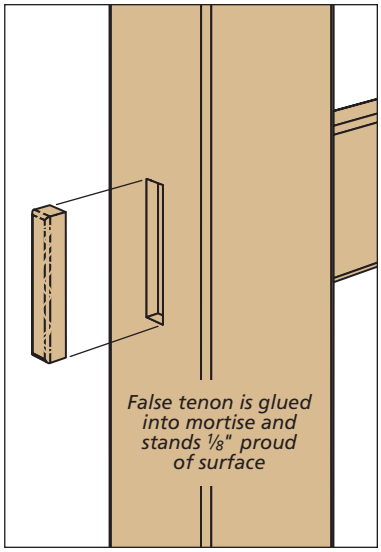

False Tenons. End grain plugs give the library table the look of through tenons — without all the work.

dowel **Joinery**

When it came to adding the corbels to the library table, I decided to use dowels to reinforce the joint between the end of the corbel and the rails (drawing at right). This created a couple of challenges.

The first was figuring out a way to drill the holes for the dowels in the ends of the corbels. Drilling into hard end grain is never easy, especially in oak. The drill bit tends to wander off course.

The solution was to clamp each corbel in the vise on my workbench and use a doweling jig and a handheld drill to drill the hole (Figure 1). The doweling jig guides the drill bit and prevents it from wandering.

TRANSFER LOCATIONS. The second challenge was to come up with a way to accurately transfer the location of the holes from the corbels to the bottom of the rail or ledger.

To do this, I simply placed a dowel center in the hole I just drilled in the end of the corbel. Then, using a combination square to help position the corbel, I pressed it in place against the ledger. The dowel center presses into the wood, creating a dimple on the rail or ledger as shown in Figure 2.

Then it's just a matter of drilling matching holes in the rails for the dowels (Figure 3) and gluing the corbels in place.

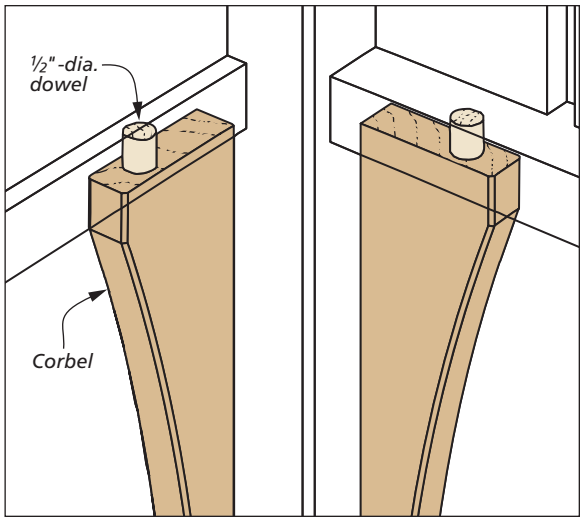

Dowel Joint. Dowels are used to strengthen the joint between the corbels and the rails of the table.

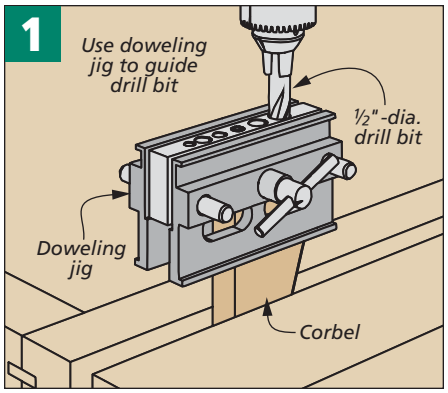

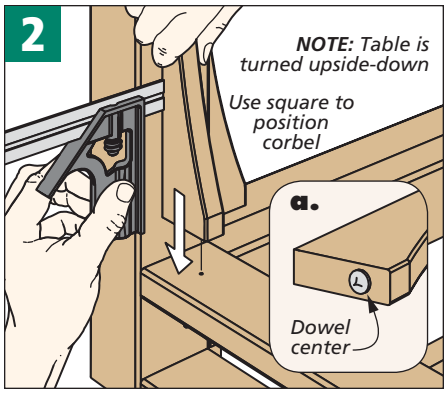

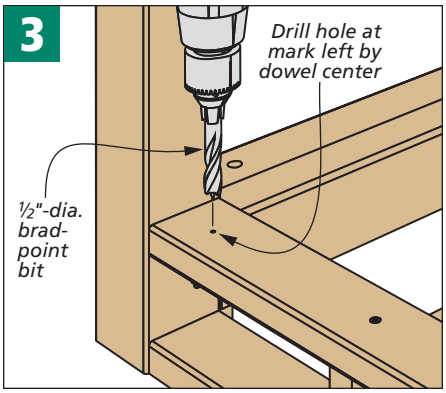

©2017 CRUZ BAY PUBLISHING, INC. ALL RIGHTS RESERVED.

ONLINE EXTRAS

antique pine Finish Secrets

You don't have to wait years to get the warm look of aged pine. With the right finishing techniques you can easily make pine look old.

Instant Age. Amber shellac can be a great tool for achieving a slightly aged pine color.

I've always enjoyed spending time browsing through antique stores — especially the ones with lots of furniture. It's a great source for ideas and a little inspiration. And often what catches my eye are the simple old pieces built out of pine. This furniture is often a little beat up, but what more than makes up for this is the rich, warm color of the wood. It's a look that's hard to beat.

And as well as admiring the old pine pieces, I like to work with good pine and create a few new pieces of my own. But working with pine has one minor challenge. I don't necessarily want my pine projects to look brand new. Sometimes I like my new pieces to have that old pine color I've often seen. A little premature aging is what I'm after.

PINE. Normally, staining wood to add some "age" isn't a big deal. But pine is a different challenge. Although pine is a soft wood, it's not evenly soft. There can be a lot of difference in the density of the wood across a board. The softer wood in the board tends to soak up a lot of stain, while the harder wood blocks it out. The color can end up pretty uneven and somewhat blotchy.

GOOD SURFACE PREP. The first step to getting a good stain job on pine is careful sanding. Just make sure all the parts are sanded to the same grit so all the surfaces are an even smoothness. Pay special attention to the end grain. If it's rough, it'll really soak up a stain. As a rule I'll sand pine to 180 grit and I'll sand finer on the end grain.

Thin Properly. The jar of shellac on the right is thinned with two parts denatured alcohol. The color is lighter and it will "flow" much better.

AMBER SHELLAC

If you just want to give a pine project the warm glow of slightly aged pine, amber shellac is the way to go. As you can see in the photo in the lower left corner, a single coat will turn raw pine from it's natural yellowish-white color to a much more pleasing "pumpkin" pine color. Amber shellac is actually a "colored" finish, not a stain. So you can avoid the problems (blotching and uneven color) you might have applying a stain. The application is easy and you'll get a rich, beautiful color on the pine.

APPLYING SHELLAC. I start with a small can of premixed amber shellac. But the off-the-shelf commercial mixes are going to be too thick to flow out well. So the first thing to do is thin the shellac. I usually thin shellac at a rate of of 1 part shellac to 2 parts denatured alcohol. As you see in the photo above, this lightens the color of the amber shellac considerably and will make it much easier to brush out.

Multiple Coats. Brushing on a coat of amber shellac will add some instant age to pine. Applying multiple diluted coats gives better control of the final color.

©2017 Cruz Bay Publishing, Inc. All Rights Reserved.

Under the right conditions, shellac dries very fast — within 5 or 10 minutes. Start by applying a thin coat and when it's dry, sand it lightly. A second coat will give you a little deeper color. Applying multiple light coats gives you greater control over the final color.

TOPCOAT. Now although amber shellac is a finish and forms a film on the wood, I'll rarely use it without a harder topcoat. It's just not very water or scratch resistant.

My choice of a topcoat over the shellac is a good quality varnish — either brushed or wiped. Pine is a pretty soft wood, so to me it makes sense to use a pretty hard finish for the best protection. A few coats of polyurethane or a standard varnish will create a tough film and you won't need to "baby" the soft wood.

A second reason I prefer varnish is the little bit of extra amber color it will impart to the wood. A topcoat of varnish over the shellac will really enhance the warm glow of old pine.

STAINING PINE

But sometimes the old pine pieces that I admire have a much darker, deeper color. In the past pine was often considered an inferior furniture wood, so these pieces were stained to resemble more expensive hardwoods. The stain and the natural aging of the wood and finish makes for an unbeatable color. So to get this darker, "aged" color, you're going to need to start with a stain. And successfully staining pine requires a slightly different approach.

FIRST A CONDITIONER. Before staining pine, I always apply a pre-stain conditioner. A conditioner acts to seal the wood a little bit in advance of the stain. The stain that you apply afterwards can still penetrate, but in a more controlled way. A conditioner will go a long way toward eliminating the blotches and uneven color you may otherwise see on pine.

You can condition the pine in a couple of ways. Sometimes, I'll use a light coat of dilute amber shellac. The shellac will seal the wood just enough to keep the stain from penetrating deeply. You'll get a slightly lighter (the wood won't accept as much stain) but more even color.

Commercial conditioners work a little differently but do the same thing. The ones that I've used are just thin, colorless liquids (like stain without the pigments). You apply it to the wood and let it soak in. The solvent fills the pores of the wood so that when you apply the stain (while the conditioner is still wet) it won't penetrate as deeply. It's pretty simple and it works well.

THICK STAIN. Once the wood is conditioned, the stain can be applied. And choosing the right type of stain is important. I've found that on pine the thicker the stain the better. The thick, gel stains that I like to use on pine are not absorbed into the wood as deeply as the liquid types. This means the pigments in the stain will lay closer to the surface and you'll get a much more even color.

Conditioner. A pre-stain conditioner followed by a gel stain is the recipe for beautifully "aged" pine.

APPLYING THE STAIN. When you're staining over a conditioner, you want to make a few minor adjustments to your routine. With the conditioner sealing the wood, the pigments won't penetrate as deeply. So the goal is to leave a little more "color" on the surface.

After applying the stain, I let it dry just a little longer than usual. When the stain has dulled down a bit, I start to clean off the excess, wiping with the grain. Let your rag get a little bit "dirty" with stain (see photo above). Continue to wipe until you have an even, "streak-free" color on the surface. When the stain is dry, a topcoat of varnish will bring out the warm glow you're after.

Beautiful Results. A simple step-by step finishing process gave this country-style pine kitchen table the beautiful, warm color of a classic antique.

©2017 CRUZ BAY PUBLISHING, INC. ALL RIGHTS RESERVED.

ONLINE EXTRAS

half-blind Dovetails

Here's a surprisingly quick technique for making tight-fitting dovetails.

When you open a drawer on a piece of fine furniture, you expect to see half-blind dovetails. With a strong mechanical connection, a huge amount of glue surface, and classic looks, they can't be beat. But these same qualities also make half-blind dovetails a great choice for solid-wood cabinet construction, like the campaign chest.

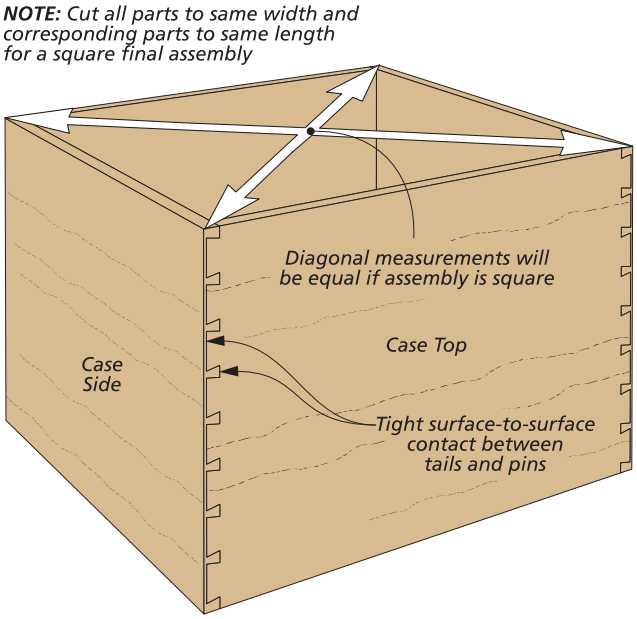

However in case construction, the size of the pieces means you won't be able to use most commonly available dovetail jigs. That leaves you with two options. You can buy a bigger, adjustable dovetail jig, but these can be pretty expensive. Or you can cut them without a jig.

NO-JIG DOVETAILS. If the idea of cutting dovetails without a jig sounds intimidating, don't worry. I'd like to share an approach with you that combines old-fashioned craftsmanship with some time-saving steps and will give you great results. The secret — using a router to quickly rough out part of the joint (more on this later).

Before getting into the nuts and bolts of cutting the joints, there are some things I'd like to mention. First of all, to end up with a square final assembly, you want to make sure your parts are all cut to the same width. And that corresponding parts — top and bottom, and the two sides — are cut to the same length, as in the drawing at left.

WORK IN ORDER. The other thing I want to talk about is the method of work. I break the process down into three parts: cutting the tails, making the pins, and fitting the joints. Then I take on each task all at one time. For example, I'll cut all the tails before starting work on the pins. It's more efficient this way and I can get into a rhythm by focusing on one part of the process.

GETTING STARTED. Now, you're ready to get started on the first half of the

©2017 Cruz Bay Publishing, Inc. All Rights Reserved.

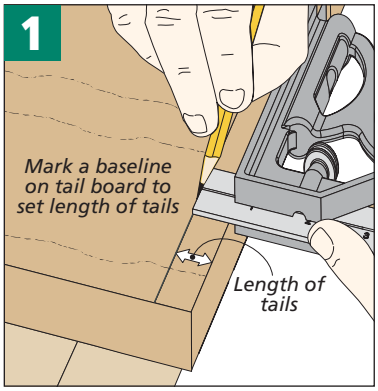

Mark the Baseline. The first thing to do is lay out the baseline on each face of the "tail" board.

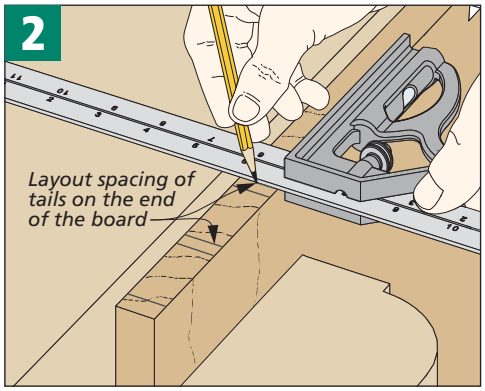

Lay Out the Tail Spacing. On the end of the workpiece, mark the spacing of the tails. I use a square to transfer the lines across the end.

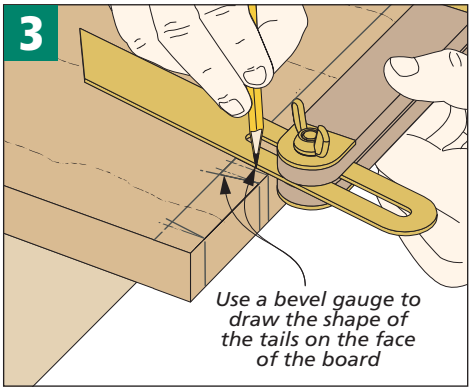

Finish the Layout. A bevel gauge comes in handy for drawing the slope of the tails on each face of the board.

joint — the tails. I find it's easier to cut accurate tails and use them as a template for laying out the more challenging pins later on. The drawings on this page give you a good idea of the step-by-step process. So I'll just mention some highlights to help you get the best results.

To keep myself from getting the parts mixed up, I label each piece. It's also a good idea to label the inside and outside faces so you know at a glance which way the parts should face when cutting.

LAYOUT. With your tail boards in hand, mark the length of the tails by drawing a baseline on the face of the board, as shown in Step 1.

The next step is to lay out the spacing of the tails on the end of the board based on the campaign chest plans (Step 2). Then finish up by marking the angled shape of the tails on the face, as in Step 3. I also mark the waste area with an 'X.'

SAWING THE TAILS. When you have the layout complete, you're ready to start cutting the tails. This is a simple, three-part process.

First, the cheeks of the tails are cut with a back saw, as illustrated in Step 4. The goal you're aiming for here is to cut flat, smooth cheeks as close to the layout lines as possible. This way, you'll only have a little cleanup work to do.

The challenge here is sawing a straight line at an angle. To make this easier, tilt the board in the vise so the layout lines are vertical. Now cut one side of all the tails. Then rotate the board to cut the other side.

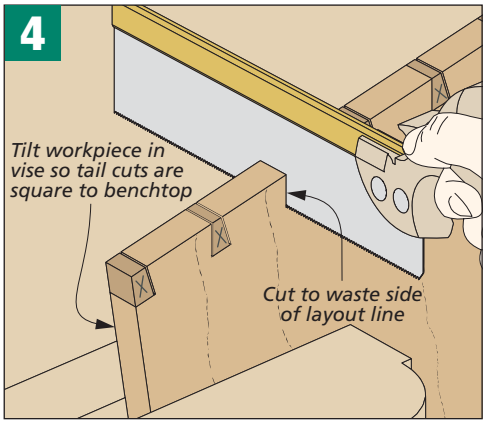

Make Cheek Cuts. With a fine-toothed back saw, cut the angled cheeks of the tails. Cut as close to the layout lines as possible.

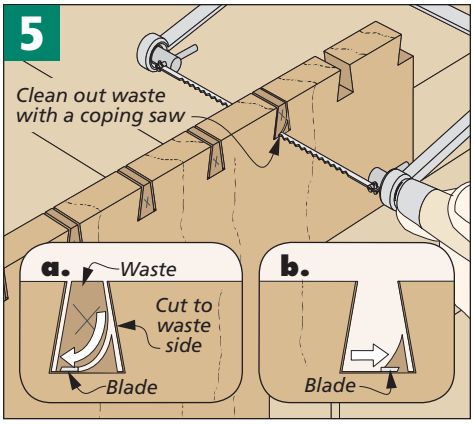

Remove the Waste. A quick way to remove the waste between tails is to cut it away with a coping saw. Two quick cuts is all it takes.

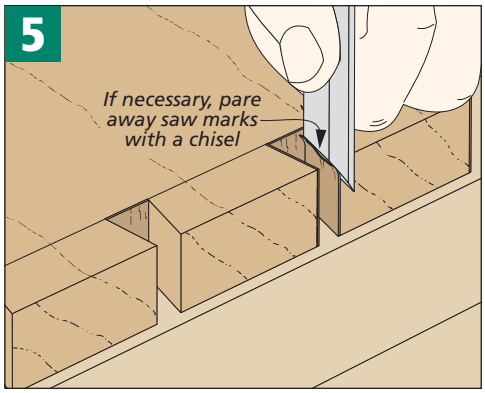

Clean up the Cheeks. If necessary, clean up the cheeks with a chisel. Taking thin cuts across the grain will prevent tearout.

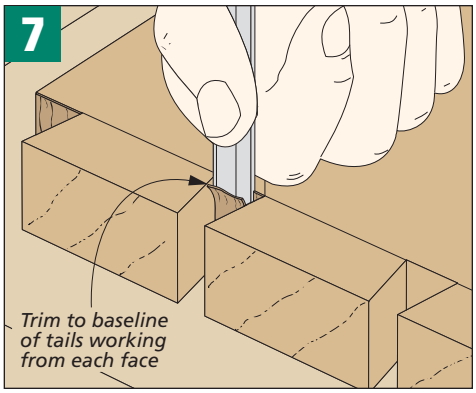

Trim the Baseline. Working from each face, chisel out the waste. On the final cut, the chisel should be right on the baseline.

REMOVING THE WASTE. The next step is to remove the waste between the tails. I use a coping saw, as in Step 5. Leave a little waste near the baseline for the final cleanup.

Since you removed most of the waste with the coping saw, you'll be able to clean up the tails with just a little trimming. One more thing: To avoid tearout, I make these trim cuts from each face, working toward the center of the board.

Once you've finished trimming all the spaces between the tails, you're ready to move on to the pins. And on the next page, I'll show you a technique that can really save some time and give you good results.

©2017 CRUZ BAY PUBLISHING, INC. ALL RIGHTS RESERVED.

cutting the **Pins**

The mating half of the half-blind dovetail joint is the pins. And they're a little more challenging to make. One reason for this is the pins are visible from only two sides of the workpiece. So your access to cutting and trimming is limited.

Another challenge is that you'll need to make the pins match the tails exactly for a perfect fit. But as you'll see, you can overcome both of these issues. The trick is a simple layout and a unique approach to routing the pins that can both increase accuracy and save time.

LAY OUT THE PINS. Just like the tails, the first step in making the pins is the layout. But there are a few differences here to point out. First, you'll need to draw two baselines.

One is laid out on the inside face of the pin board. It should match the thickness of the tail board. Actually, I like to lay out the baseline a hair deeper. This way, I can trim the pin board flush with the tails after assembly for a perfect fit.

The second baseline is drawn on the end of the pin board, as you can see in Step 1 below. And it's determined by the length of the tails.

With these baselines set, you can lay out the shape of the pins. For this step, I use the mating tail board as a template, as shown in Step 2. With the pin board clamped in the vise and flush with the bench top, I set the tail board on top of it and transfer the shape of each tail to the end of the pin board.

Then, as Step 3 shows, I use a square to continue the lines across the face of the pin board to the baseline. Before moving on, I mark the waste area to be removed.

ROUTER SAVES TIME. You'll notice there's a lot more waste material that has to be removed here compared to cutting the tails. And removing it by hand is a tedious task. You can really save some time by roughing out the waste with a router, as in the photo above.

Besides saving time, there's another advantage that comes with

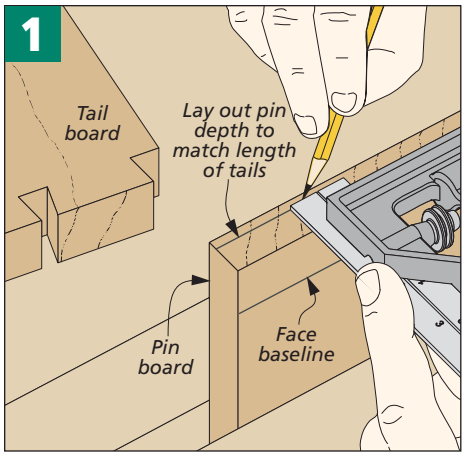

Mark Baselines. The end baseline matches the length of the tails. The face baseline equals the thickness of the tail board.

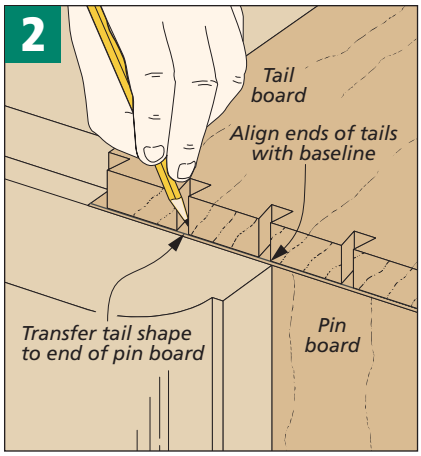

Transfer the Tail Shape. Set the tails over the end of the pin board and trace their outline with a pencil.

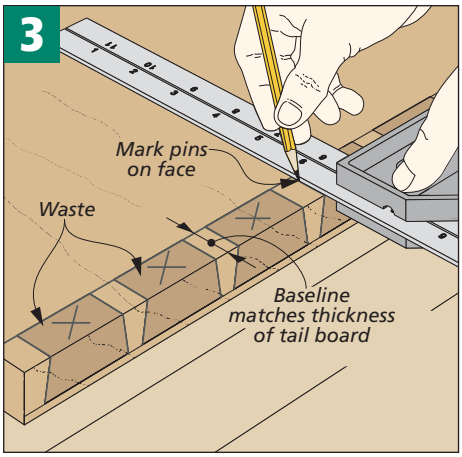

Complete the Pin. Pick up a square and complete the pin shape to the baseline on the face of the pin board. Mark the waste.

©2017 CRUZ BAY PUBLISHING, INC. ALL RIGHTS RESERVED.

using the router. The bit creates a perfectly flat surface at the bottom of the tail sockets. And a straightedge gives me another flat starting point for cleaning out the corners. You can see the setup for the routing in Step 4. (I used a palm router, but any type of router will work.)

I clamped a straightedge to the pin board to act as a backstop so I wouldn't rout the pin sockets too deep. In order to position the straightedge, you'll need to measure the offset from the edge of the router base to the edge of the bit.

The next step is to set the depth of the straight bit. The bit depth should match the length of the tails.

ROUT THE WASTE. The actual routing is pretty straightforward stuff. However, taking a full-depth cut places a lot of stress on the router bit and motor. You can avoid this by gradually "nibbling" away the waste, making several sweeping passes from left to right in each socket. With each pass, you can work steadily deeper into the socket, taking about a ⅛" bite at a time, as in details 'a' and 'b' in Step 4.

Rout as close to the layout lines as you feel comfortable. Remember, the more you rout, the less you need to trim away with a chisel.

CLEAN UP WITH CHISELS. The final steps in making the pins are shaping the sides and cleaning up the back corners. This is done with some chisel work. As I mentioned before, the flat spots you made with the router will help guide the chisel strokes. You'll find it's best to take thin cuts and sneak up on the layout lines.

It's tempting to say, "That's all there is to it." But more than likely, the joint will still be too tight to fit together properly. Don't worry, all it takes are a few well-placed paring cuts with your chisel to get it to fit. And you can read more about that in the box below.

The result of your efforts will be tight-fitting joints that come together snugly. And something you'll be proud to show off.

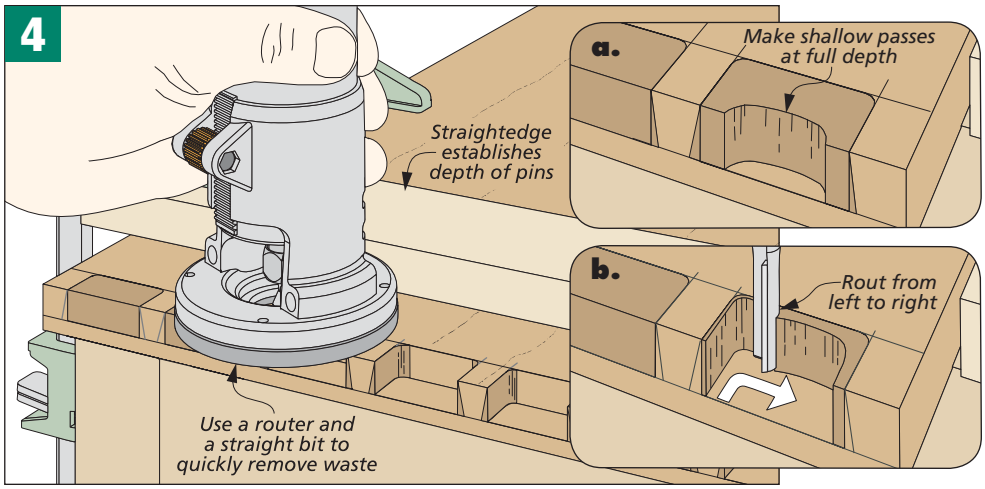

Rout Away the Waste. You can quickly remove the waste with a router and a straight bit. To guide the router along the baseline, clamp a straightedge to the workpiece. Take shallow cuts to work toward the layout lines.

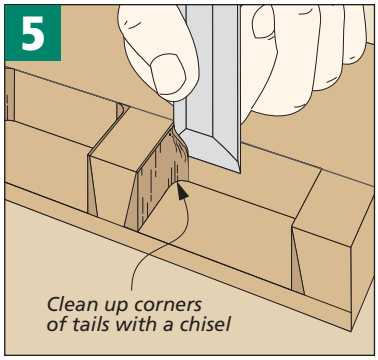

Clean Up Corners. Using the flat edge created by the bit, clean up the back corners of the pin sockets.

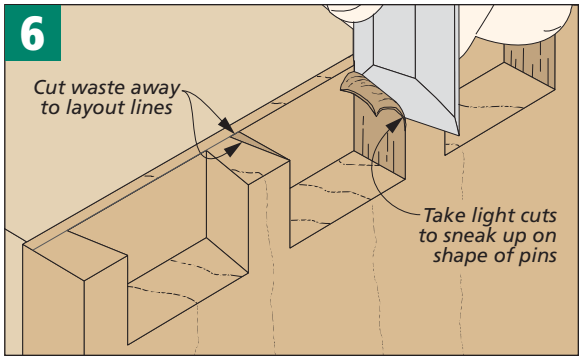

Shape the Pins. To complete the work on the pins, pare away the waste on the pin sides with a chisel. Take thin cuts to avoid splitting the grain.

How-To: Trim for a Snug Fit

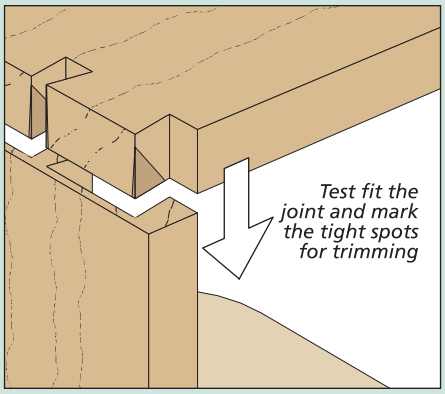

Part of the challenge of fitting dovetail joints is knowing where to start. I like to begin by doing a test fit and taking a close look at each pin and tail to see where the joint is tight, as shown in the drawing at left.

After marking the tight spots, you can grab a chisel. I trim the tails only (not the pins) since I can trim from both sides. Then I take thin passes on the inside face of the tails (right drawing). This allows the joint to slide together easily but snugly.

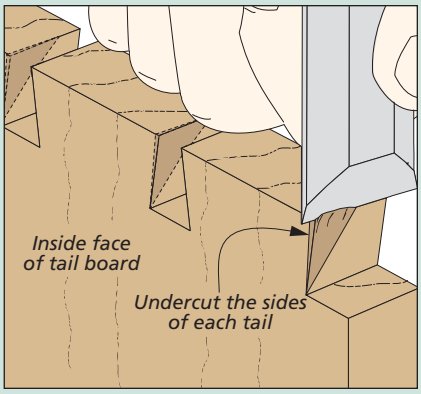

©2017 CRUZ BAY PUBLISHING, INC. ALL RIGHTS RESERVED.

ONLINE EXTRAS

insetting Brass Corners

Installing flush-mounted corners can be tricky. But here are a few techniques to help you get top-quality results.

No matter how much time and effort you put into building a project, the hardware — and how well it's installed — can make or break the look of the completed piece. And when the hardware is inset or flush-mounted, it requires extra attention to detail to get it right.

For example, the brass hardware used on the campaign chest really gives the piece a classic look of strength and durability. And while the handles and drawer pulls are pretty easy to install, the brass corners can prove to be a little bit more challenging.

WHY BRASS CORNERS? Campaign chests were originally designed to be more than just pieces of furniture. They also served as rugged "luggage" for military officers as they travelled the world from one post to another.

As you can imagine, the chests were subjected to a fair amount of abuse. So the builders of these chests incorporated brass hardware to protect the corners.

The hardware was inset for a couple of reasons. First, it was less likely to snag clothing as the chest was being carried. And, it kept the hardware from getting knocked loose by other items during transport.

For our version, I wanted to preserve the authentic look and feel of those durable chests. And after I found the right hardware, it was just a matter of fitting it properly.

THE PROBLEM WITH CORNERS. If you take a close look at the photo above, you'll notice that the recess is cut so the corner will sit flush with three different surfaces — the top, front, and side of the chest. So you can't just set the corner in place, mark the outline, and create the recess. As you adjust the fit for one surface, it affects the fit on the other surfaces.

The solution is to create the recess in stages. That is, first lay out the position on one surface, make the cuts, then move on to the next surface. You'll need to come back to correct edges and clean up the details as you progress. The step-by-step instructions on the opposite page will help you out.

Shop Tip: Setting Depth

To set the bit depth for cutting a shallow recess, just hold the hardware on its side on the base of the router, as shown. Use the tip of your finger to judge when the bit depth matches the thickness of the brass. Then lock the router base in position.

©2017 Cruz Bay Publishing, Inc. All Rights Reserved.

How-To: Inlet Corners

The trick to getting a good fit on the corners is to work in stages. I like to start by marking the outline on the side and front of the chest, as shown in Step 1. This way, you'll be able to position the corner to mark the curved outline on the top surface.

Palm Router. After marking the edges, I turned to my palm router. For this kind of precision work, I find it's much easier to control than a full-size router. The tip on the opposite page can help you set the depth of the bit for these shallow cuts. Then you can just rout out the waste between the marks (Step 2). I used a dado cleanout bit (main photo). You can clean up the corners for now with a sharp chisel, as shown in Step 3. You'll come back later to work on getting an exact fit.

Round the Edges. With the recess in the front and side cut, it's time to round over the sharp edges to fit the inside radius of the brass corner. I used a chisel and sanding block to knock off the edges, checking the fit as I progressed. The important thing here is not to remove too much material. You want the brass to be fully supported by the wood underneath.

Now you can put the corner in place and trace the top outline (Step 3, detail 'a'). Then use the router to remove the waste close to the layout line, as shown in Step 4.

Clean Up with a Chisel. Now it's time to fine-tune the fit. When paring to a curved line, you'll need to be careful about tearout. The easiest way to avoid this is to score the outline with a knife or corner of a chisel.

Now you have most of the recess formed, but you'll still need to go back to each surface and "tweak" the fit (Step 5). Since the corner now sits lower in the top recess, you'll need to trim a little off the bottom edge of the side recesses. A little patience is all it takes to get a perfect fit.

Finally, the last step is to drill a few pilot holes and fasten the corner in place with screws.

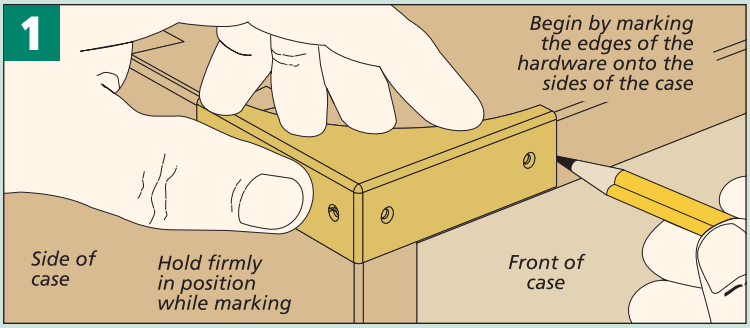

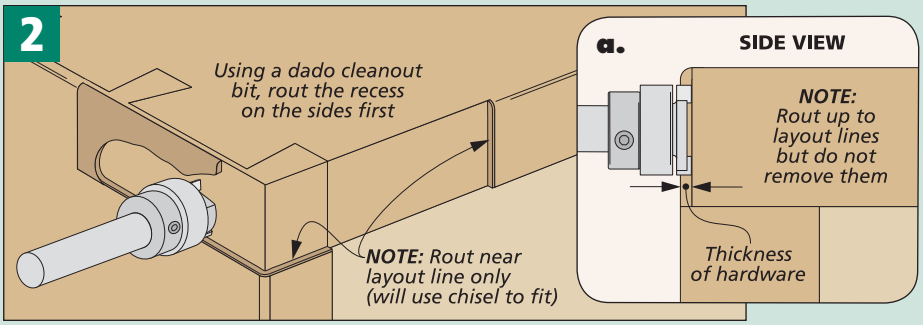

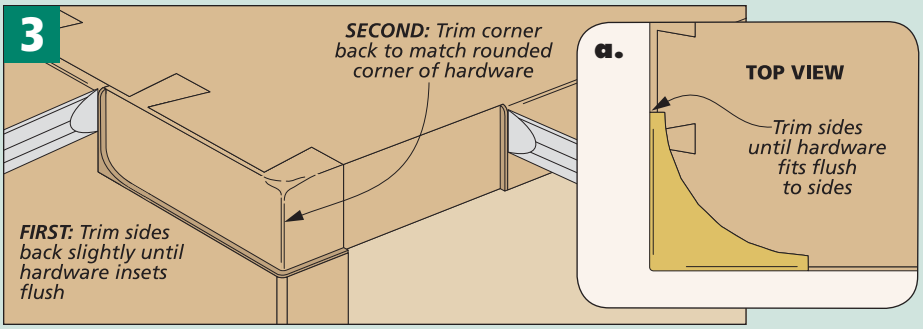

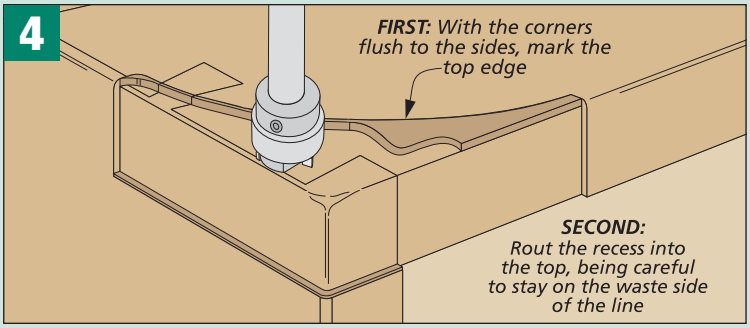

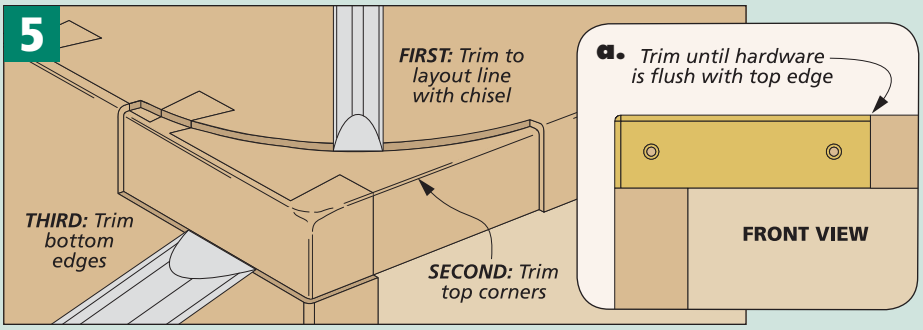

©2017 Cruz Bay Publishing, Inc. All Rights Reserved.

ONLINE EXTRAS

knock-down Table Base

Traditional knock-down table construction has been around for a long time. And once you try it, the reasons become obvious. First, it can really simplify the joinery without sacrificing strength. Second, it makes the assembly of the frame a leisurely process and pretty much foolproof. And last but not least, it allows you to disassemble a table into manageable pieces for moving or storage.

HOW IT WORKS

At first glance, you'd be hard pressed to tell that a knock-down table wasn't built with mortise and tenon joinery. But the key here is that there isn't any joinery between the legs and the apron. On a traditional knock-down base, stout, wood corner brackets are fixed between the apron pieces to create a rigid frame. Hanger bolts inserted into the legs mate with holes in the brackets (Fig. 1). And when the nuts are snugged down, the legs and apron are pulled into a tight, square base (Fig. 1a).

THE LEGS. The usual place to start the joinery of a table base is with the legs, and in this case it's an easy job. All you need to do is to chamfer the inside, top corner of each leg as shown in Figs. 2 and 2a. This serves a couple purposes. It'll give you clearance for the corner brackets and a flat surface in which to install the hanger bolts. That's it.

THE APRONS. The work on the aprons is almost as easy as the legs. You can get started by cutting them to width. And since you won't be cutting any tenons on the ends of the aprons, their length will be the distance separating the top ends of the legs. Just make sure the apron ends are clean and square.

To give the corner brackets a better grip on the apron, I cut a wide dado at each end of the apron pieces. These dadoes capture a 1"-wide tongue on the ends of the

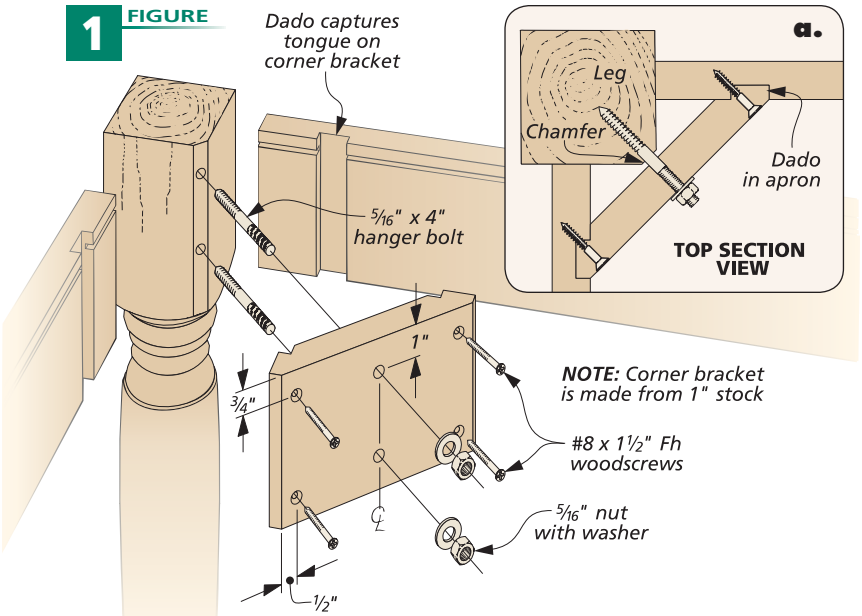

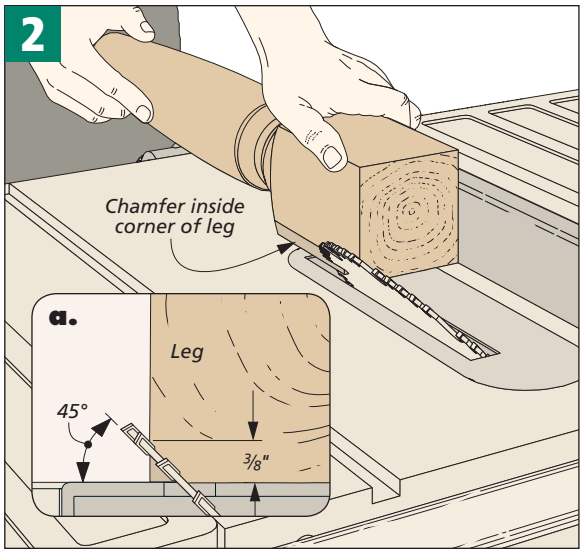

©2017 CRUZ BAY PUBLISHING, INC. ALL RIGHTS RESERVED.

corner brackets. The result is an extremely rigid base (Fig. 1a).

MAKING THE CORNER BRACKETS. With the work completed on the legs and aprons, all you need now are the corner brackets. And to ensure the frame ends up true and square, you want all four brackets to be identical. But with a simple step-by-step process, this isn't difficult.

You can get started by cutting the four bracket blocks to size from 1" stock (Fig. 3). Next, lay out all the cuts on just one block — your set-up piece. You'll use this piece to make your initial cuts. A stop block on the miter gauge will make duplicating the cuts in the other pieces a cinch.

FIRST CUT. Fig. 3 shows how to get started by cutting the short 45° miter on the outside face. Just sneak up on the layout line, adjusting the stop block as you go. When your cut is right on the line, you can flip the piece end for end to make the opposite cut. Then cut the other pieces.

SECOND CUT. Now reset the stop block to make the long 45° cut on the inside face using the same steps as before (Figs. 4 and 4a).

THE TONGUE. The final two cuts on the brackets will form a V-notch and complete the tongue. Again, using a stop block I first cut the inside face of the V-notch (Figs. 5 and 5a).

Now to complete the tongue, you'll have to make the final cut from the opposite side of the blade. If you take a look at Figs. 6 and 6a you'll see how I made this cut. The long auxiliary fence on the miter gauge makes it possible. Remember that the goal is a snug fitting tongue, so check the fit in the dadoes as you sneak up to the layout line.

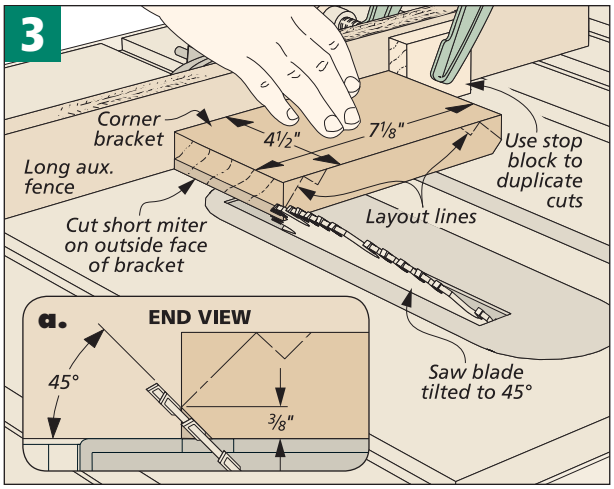

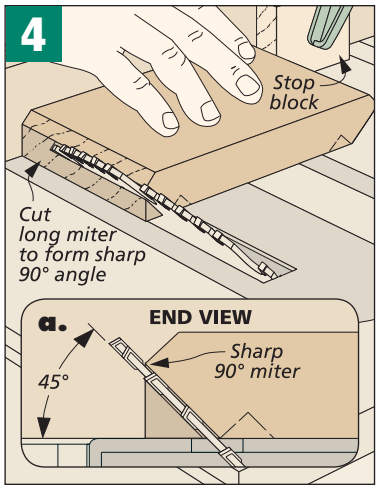

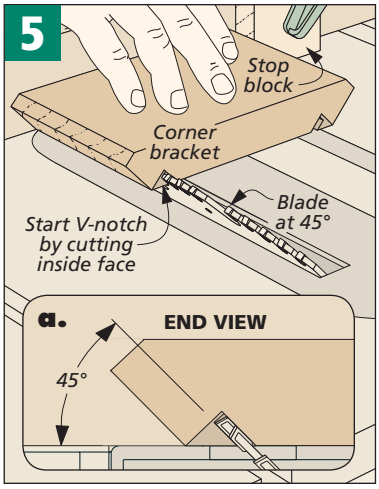

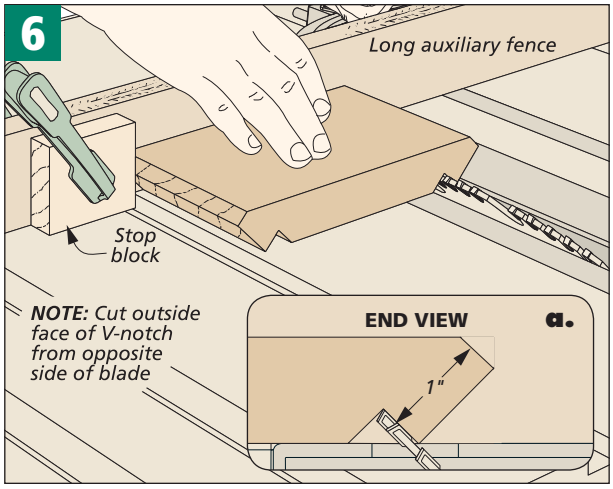

HOLES. One more task and the base is ready to assemble. Two oversized holes drilled in each corner bracket will hold the 5/16" hanger bolts.

ASSEMBLY. Now you're ready to put the pieces together. The box below shows the simple steps to the assembly.

Upside-Down Assembly

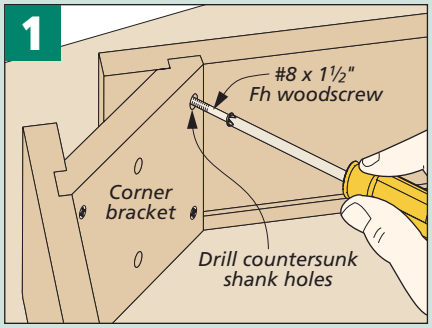

Add a Bracket. The base can go together corner by corner. First, a bracket is fastened to the aprons with woodscrews.

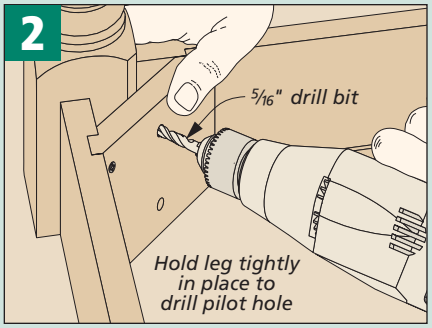

Drill Pilot Holes. Next, the predrilled holes in the corner brackets are used to drill pilot holes in the legs for the hanger bolts.

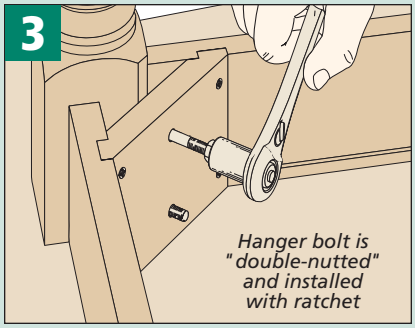

Drive Bolts. Finally, the hanger bolts are installed. Tightening down the nut draws the leg and apron tightly together.

©2017 CRUZ BAY PUBLISHING, INC. ALL RIGHTS RESERVED.

square **Plugs**

The top of the Craftsman-style clock is joined to the case with woodscrews. These screws are installed in shallow, square mortises and then covered with plugs. It's not a difficult process, but it does require a little attention to detail.

I started by drilling four shallow, 1⁄2"-dia. holes in the top of the clock for the screws, as shown in Figure 1. Then, using a chisel, I squared up each hole to create a shallow mortise (Figure 2).

To make the end-grain plugs, cut a 1⁄2" square blank and slice the plugs from the end of the blank at the band saw (Figure 3). I cut mine a little thick so they could be trimmed flush after being installed.

After screwing the top to the case, the plugs can be glued into the square openings. Then simply pare the plugs flush with the top of the clock (Figure 4).

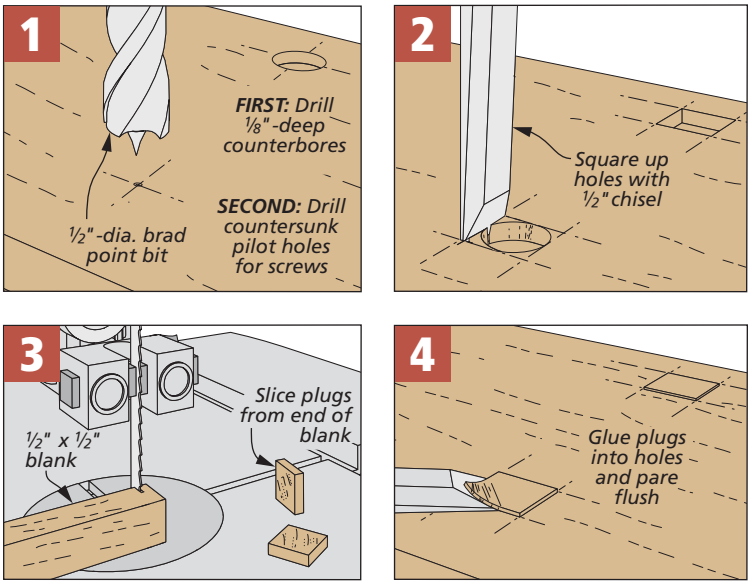

 ©2017 Cruz Bay Publishing, Inc. All Rights Reserved.

mortise **Jig**

To create the mortises for the loose tenons used on the bench, I turned to my plunge router and a simple shop-made jig, like the one shown at right.

The jig starts with an auxiliary base made out of a piece of clear acrylic (*Plexiglas*). Two adjustable hardwood fences are attached to the base with carriage bolts, washers, and wing nuts. A pair of slots in the base allows the fences to be adjusted to match the thickness of your workpiece.

To use the jig, first attach it to your router. Then place it over your workpiece and adjust the fences to fit against the sides of the workpiece. The router bit should be centered on the thickness of the stock. The fences guide the router to create a perfectly straight mortise.

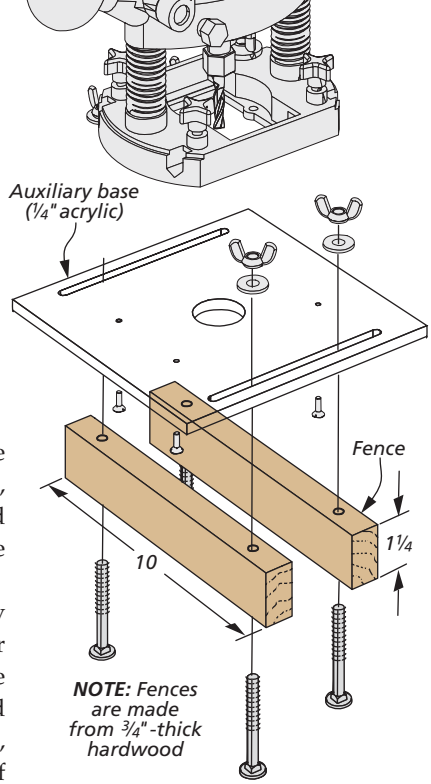

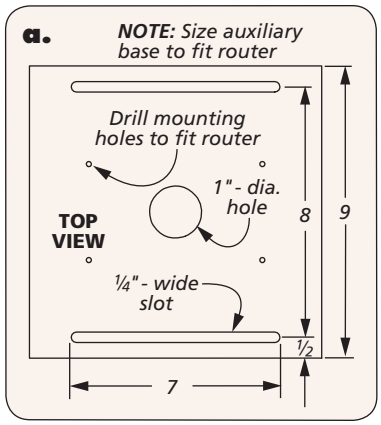

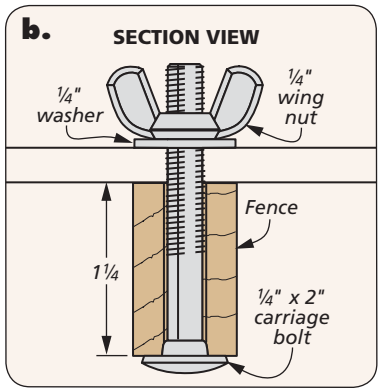

©2017 Cruz Bay Publishing, Inc. All Rights Reserved.

ONLINE EXTRAS

face frames without Biscuits

Splines can also be used in place of biscuits for most of the joinery in the bookcases as well. The only exception is when it comes to joining the rails and stiles of the face frame.

Here, I would suggest using a traditional stub tenon and mortise joint, see drawing at right. A mortise and tenon will help lock the rails and stiles together tightly, giving the face frame the strength it needs to prevent the bookcase from racking.

The only thing to be aware of is that when cutting out the parts for the bookcase, you'll have to cut the rails slightly longer to allow for the tenons, see detail 'a.'

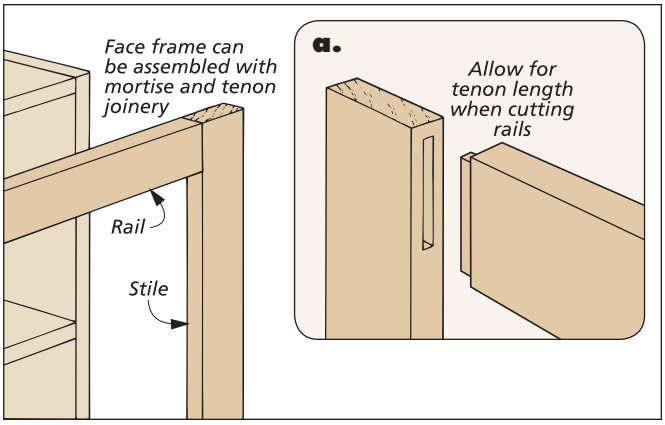

©2017 Cruz Bay Publishing, Inc. All Rights Reserved.

ONLINE EXTRAS

one-bit Locking Rabbet

A new way to make a tried and true joint.

In woodworking it's easy to get into a rut. But often there's a reason. You tend to stick with what works.

That's why, when I have to build drawers for a project, more often than not I'll return to the trusted locking rabbet joint for the joinery. It makes a strong drawer and I've always liked the way it looks.

A dado blade on the table saw has generally been my tool of choice to cut this joint. But recently I came across a new way to make this joint — with a drawer lock router bit. Its clever design allows you to cut both halves of the joint with a single bit. And I found that it works pretty well.

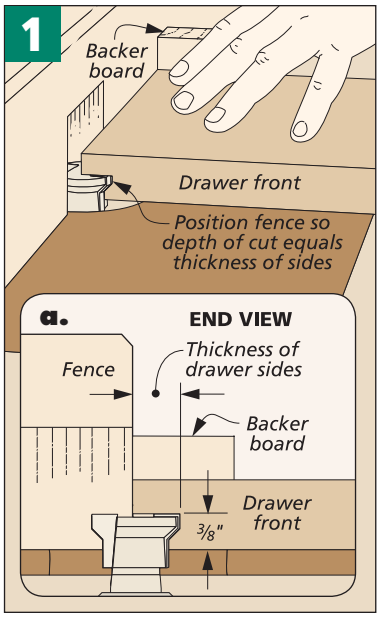

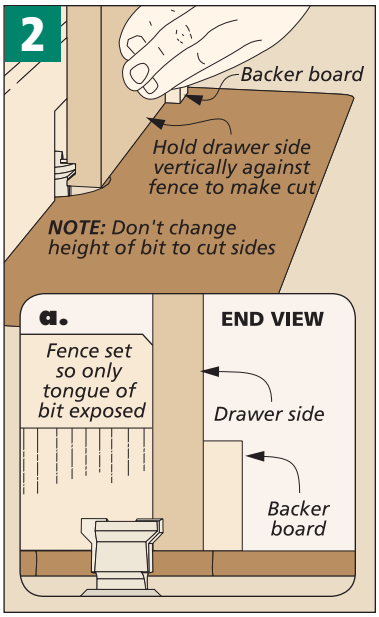

THE SETUP. The key to using one of these bits is the setup. After you have the bit installed in the router table, the first step is to adjust it to the right height. In order for the joint to be a tight fit, this is pretty important. The cutting height of the bit is given by the manufacturer (mine was 3/8") and it will only work right when it is set at this particular height.

Once you've zeroed in on the correct height, you won't have to change it. Both halves of the joint can be cut using this same setting. The trick is in how you hold the different pieces as you rout the joint.

FRONT & BACK. First you want to make the cut on your front and back drawer pieces. These pieces are routed flat as shown in Fig. 1. Just set the fence to rout the ends to a depth that matches the thickness of the sides, as shown in Fig. 1a. You can prevent chipout with a backer board.

THE SIDES. Now all you have to do is rout a matching cut in the drawer sides. But this is a little different. Don't change the height of the bit but move the fence forward so that only the "tongue" of the bit will cut (Fig. 2a). Now you'll cut the sides with the pieces standing on end.

Just hold the side tightly against the fence and make a shallow pass (Fig. 2). Again, using a backer board is a good idea. You'll want to sneak up on the depth of the cut, testing the fit as you go. When the side fits flush with the end of the drawer front, you're joint is done.

Lipped Drawers

Occasionally a design calls for a drawer with a lipped front as shown in the near photo at left. Kitchen cabinets and some furniture styles often call for this treatment. And the drawer lock bit will easily accommodate it. It's simply a matter of making a deeper cut in the drawer front. A couple of passes will be necessary.

©2017 CRUZ BAY PUBLISHING, INC. ALL RIGHTS RESERVED.

ONLINE EXTRAS

plate Joinery

In terms of sheer speed, nothing beats a plate joiner. You can have a joint cut and assembled in the time it takes just to lay out a traditional joint.

Pull a new plate joiner out of its box, and in a few minutes, you can be using it to build a project. Getting the basics down takes hardly any time at all. And when you start building the project, you'll be amazed at how quickly you'll be able to work. A joint can be laid out, cut, and assembled in minutes — with the same accuracy as other, more traditional joints that might take a half hour to complete.

SIMPLICITY. The reason a plate joiner is so quick is because it's simple. It does one thing — scoop out a circular-shaped slot, see drawings above. This slot is cut in mating workpieces that butt together. Then the joint is glued together with a special spline, a "biscuit" that's shaped like a football, see drawing below. This biscuit is a compressed piece of solid wood. So when you add the glue during assembly, the biscuit swells, creating a tight fit in the slots.

The first time I picked up a plate joiner, I thought it looked and felt (and sounded) like a small right angle grinder. It's as if the grinding wheel was replaced by a small circular saw blade, though you don't actually see this blade — it's covered by the joiner's face plate and fence.

PLUNGING MOTION. But unlike a grinder, the plate joiner works with a quick plunging motion. With one hand gripping the trigger barrel and the other on the handle, you simply butt the fence and face plate against a workpiece and squeeze the trigger, see drawing above. Pushing the handles against the piece compresses a spring and plunges the blade into the wood. Although you never see the blade, you know the tool is doing its job by the "whine" of the motor and the clean slot that's left in the piece.

This quick plunging motion is all there is to cutting the slots. But cutting the slot is only one part of the process. You also have to lay out the joint and set up the joiner for the cut. Fortunately, these tasks are almost as quick as cutting the slot.

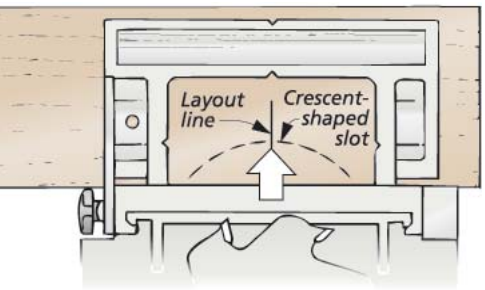

How It Works. To cut its slot, the joiner's fence and faceplate are set tight against a workpiece. Then the small circular blade is simply plunged in and out of the wood.

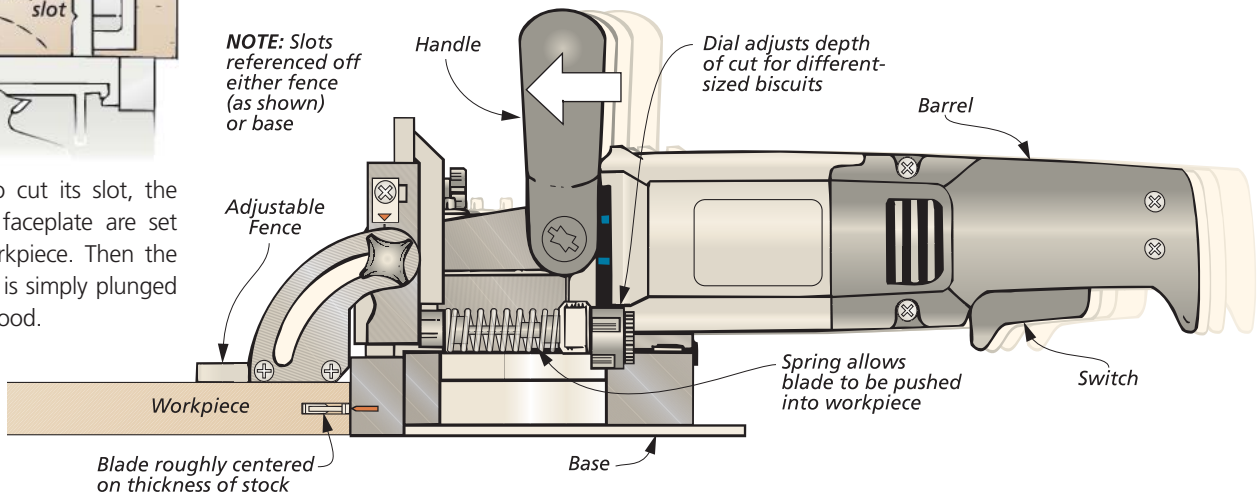

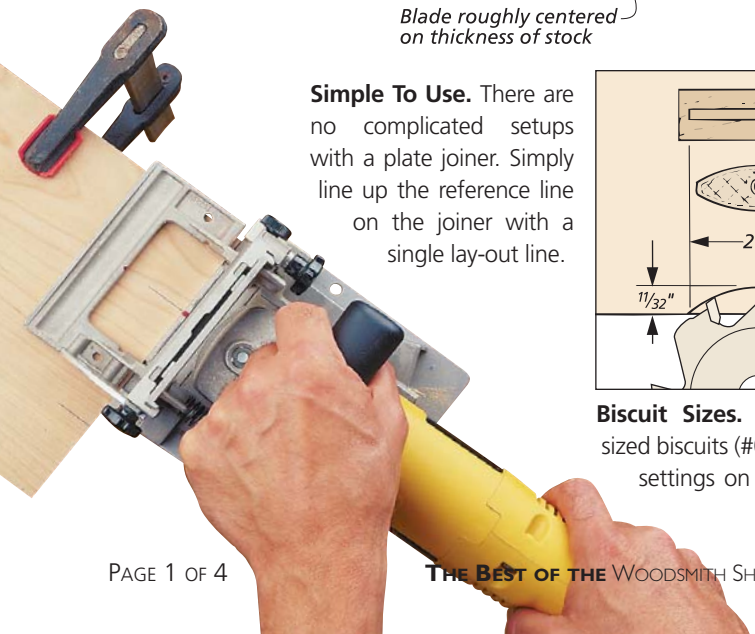

Simple To Use. There are no complicated setups with a plate joiner. Simply line up the reference line on the joiner with a single lay-out line.

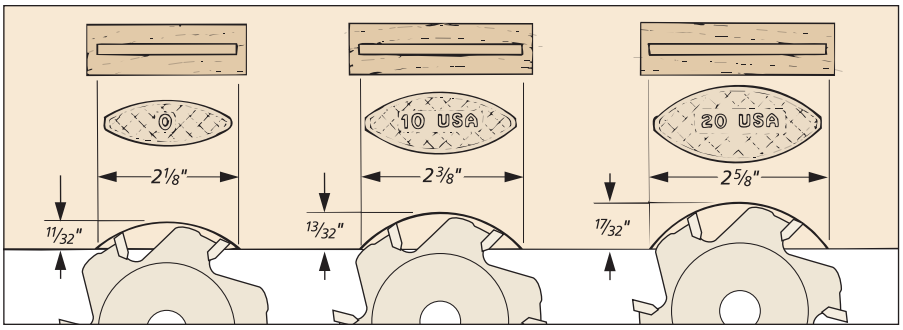

Biscuit Sizes. There are three standard sized biscuits (#0, #10 & #20). Preset depth settings on the plate joiner adjust the depths (and widths) of the slots, which are slightly oversize. The #0 biscuit requires a workpiece about 2¼" wide.

©2017 Cruz Bay Publishing, Inc. All Rights Reserved.

LAYING OUT SLOTS. The layout is as easy as locating the center of each biscuit. And the spacing of the biscuits isn't critical, either. So you don't need any layout tools. Just dry assemble the two pieces and draw a quick line across the joint, see Fig. 1 above. Then when cutting the slots, align the layout line with the reference line on the plate joiner and make the cut, see Fig. 1 and photo on page 14.

If you're like me, you'll lay out the first few joints with the same precision as a hand-cut dovetail. But a biscuit joint isn't a glove-tight fit. The slots are slightly wide and deep to allow for some built-in "breathing room," see lower drawing on page 1. Because of this extra room, you'll be able to adjust the workpieces during assembly to make sure they align.

SETTING UP JOINER. To set up a joiner, you have to set the depth of the slot, center the blade, and occasionally angle the fence. This sounds like a lot more work than it really is. That's because 95% of the time, I'm working with ¾"-thick stock and a square fence, so all I have to do is set the depth of the slot. And even this is easy.

DEPTH OF CUT. There are three sizes of biscuits (see lower drawing on page 1), and the slot depths are all preset. So all you have to do is turn a dial to the right biscuit size, and you're ready to begin cutting the slots.

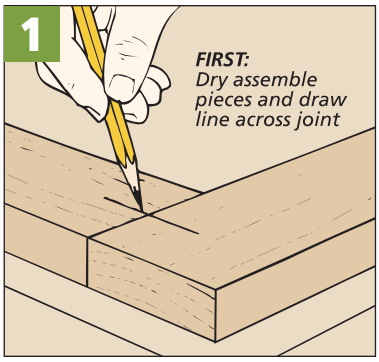

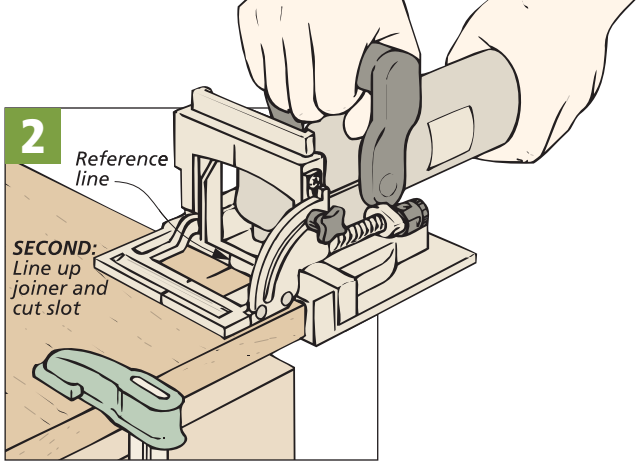

FENCE HEIGHT. As for the fence, it should be set so the slots are roughly centered on the thickness of the pieces, see drawing at top of page 1. And as I mentioned earlier, the majority of the time I'm working with ¾"-thick stock anyway, so I don't have to adjust the fence very often (and it only takes seconds).

Note: When working with ¾"-thick stock, you can also use the base as a reference. Just be consistent. Don't use the base for one piece and the fence for its mating piece — the two slots may not line up with each other.

FENCE ANGLE. With the depth of cut and fence set, you're ready to cut the slots. However, with some joints, you also need to angle the fence. There are a number of ways to do this depending on your particular model of joiner, see margin photos on page 4. But again, most of the time you won't have to think about this.

These are just some basic points. But before you get started, there are a few simple setups to learn. Over the next couple of pages, I'll talk briefly about the common joints you'll build with your plate joiner, highlighting anything you need to watch out for. Plus, there are a few quick tips I've found useful when working with a plate joiner, see box on page 4.

Frame Joints

Frames are perfect for plate joinery, see photo. A slot is cut in the end of one piece and the edge of the other, and you don't have to worry about allowing for tenons — the rails and stiles simply butt together. The only limitation you'll run into is with narrow boards. Even with a #0 biscuit, the workpieces have to be at least 2¼" wide, or the slots will cut all the way across the ends. (Note: When laying out narrow pieces, it's a good idea to center the lines exactly.)

To make a frame, first dry assemble each corner and draw a layout line across the joint, see Fig. 1 above. Then clamp each piece down and cut its slot, see Figs. 1 and 2 below.

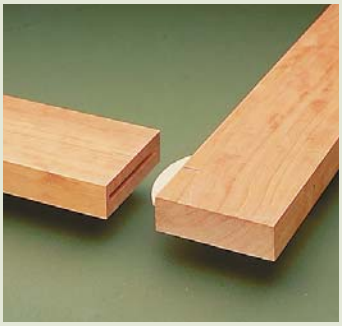

Durable. A strong face frame is quick and easy to build with a plate joiner.

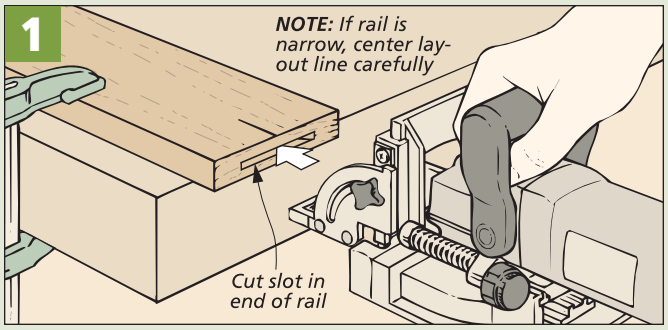

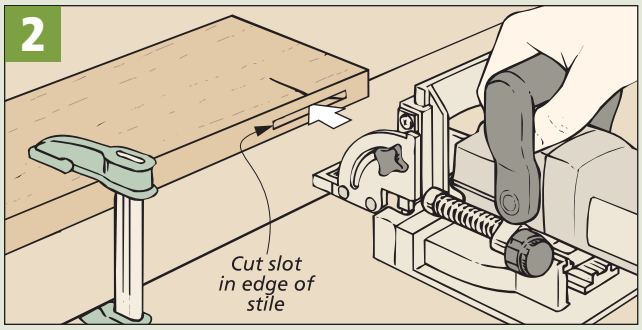

©2017 Cruz Bay Publishing, Inc. All Rights Reserved.

corner **Joint**

A corner is also easy to create with a plate joiner. Here, the end of one piece is slotted and butts into the face of the other piece, see photo. But there's more to this than you might think.

LAYOUT. A corner joint begins like any other plate joint. The pieces are set together and layout lines are drawn on the outside face and end, see photo. Then the slots can be cut in the end of one piece, see Fig. 1.

The trick comes when you're cutting the slots on the face of the mating piece. Here the fence rests on the end of the board, and it's a bit of a balancing act to keep both the fence and face plate tight against piece. It's hard to "feel" whether the joiner is sitting square on the thin end of the board.

BACKER BOARD. However, there is a simple solution. I clamp the piece vertically in a vise, see Fig. 2. And to make the end "thicker," I slip a backer board behind the piece, see Fig. 2a. Then I cut the slots.

LONG WORKPIECES. Unfortunately, this technique won't work when you have long workpieces. You can't stand them on end. So instead, I lay the pieces down and treat them like a T-joint, see the section below. And to support the joiner, I also add a spacer block, see tip box on page 4.

Corner Assembly. To join a corner with biscuits, slots are cut in the end of one piece and the face of the other.

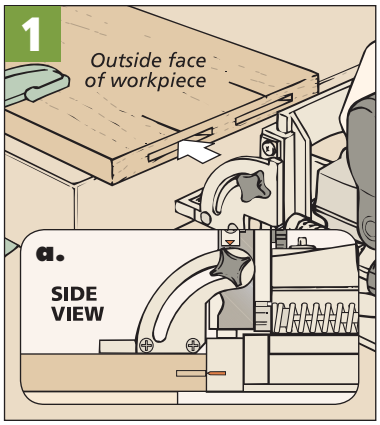

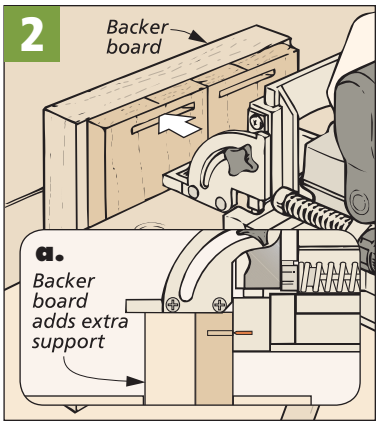

Quick **T-Joint**

A T-joint has slots cut in the end of one workpiece (the cross piece) and in the center of the other piece (the side), see photo at right. It's the side piece that requires all the work. The reason? There's no edge or corner to reference the plate joiner to. This means you have to "create" a temporary corner to butt the tool against.

LAYOUT. To layout a T-joint, first draw a line to locate the bottom edge of the cross piece on the side piece and clamp the cross piece flush with this layout line, see photo at right and Fig. 1 below. Then you can lay out the centers of the biscuits on both the sides and cross pieces. At this point, you're ready to begin cutting the slots.

Note: When joining the sides and shelves on the bookcases, I used a slightly different technique. To speed things up, I clamped the two sides together, added an auxiliary fence, and cut the slots in both sides at the same time.

USE BASE. A T-joint is unique in another way. You can't use the joiner's fence to reference the cuts on the side pieces — so you can't use the fence on the cross pieces either. Instead, the base is used for both. First, set the base on the side piece and cut the slots in the end of the cross piece, see Fig. 1 below. Then to cut the slots in the face of the side piece, simply stand the joiner up and set its base tight against the cross piece, see Fig. 2.

Support. To cut the slots in the side piece of a T-joint, you'll need to create a temporary corner for the joiner.

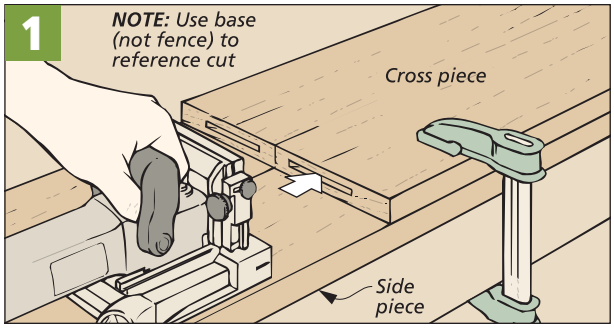

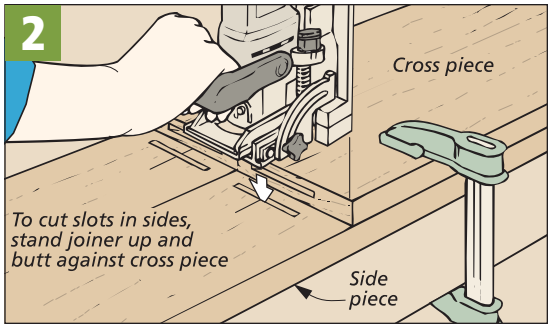

©2017 Cruz Bay Publishing, Inc. All Rights Reserved.

miter **Joints**

Because there's no end grain visible, I like the clean look that's created by miter joints. But it's nice if they can be reinforced. Adding a biscuit is a really quick way to strengthen a miter joint, whether the workpieces are part of a frame (like the edging around the top of the TV cart) or part of an apron (like the base of the TV cart), see the photos at right.

MITERED FRAME. Using biscuits to join a mitered "frame" (where the pieces are mitered across their widths) is almost identical to using them to build a face frame. You don't even have to change the angle of the fence — the jointer cuts straight into the mitered end, see Fig. 1 at right. The only difference is that the slots are cut in the ends of both pieces.

Another benefit is that because a 45° miter is longer than the width of the workpiece, you can add a biscuit to a narrower piece (down to 1/16" wide) without the slot being visible.

BEVELED MITER. Instead of being mitered across the face, a workpiece can also be beveled across the ends (as on the base of the TV cart), see right photo above. This means you may have to adjust the fence to 45°, see margin photos at right. There are two ways a plate joiner fence will tilt, depending on the model. Some sit on the face of the workpiece, straddling across the inside corner, see lower margin photo. But I prefer to have the joiner trap the point of the workpiece, see Fig. 2 and upper margin photo. It feels much more "secure."

The thing that's critical when cutting a slot into the beveled end of a workpiece is the position of the fence. Instead of centering the slot on the thickness of the piece, I set the fence so the slot is closer to the inside corner, see Fig. 2a. This way, you can use a larger biscuit without worrying about "blowing" through the outside face with the plate joiner.

Miters. Adding a biscuit to the ends of mitered pieces is a quick way to strengthen a frame.

Bevels. A beveled miter is also made a lot stronger by a biscuit. But with this cut you have to angle the fence.

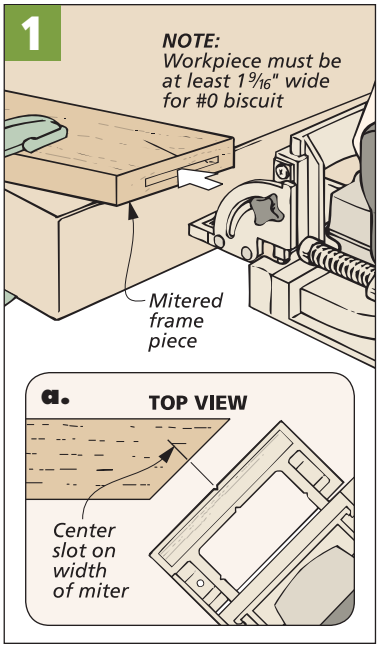

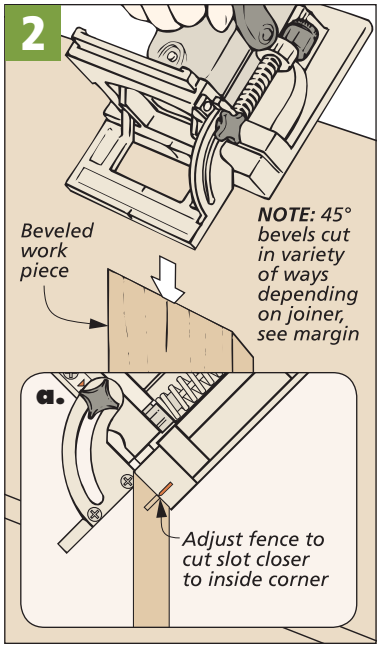

Angles. Many plate joiner fences adjust to trap the point of a 45° bevel.

Inside Bevel. Some plate joiner fences adjust to fit over the inside corner of a 45° bevel.

Plate Joinery Tips

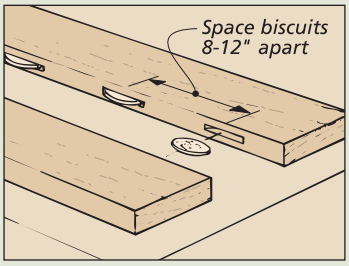

Edge-to-Edge Joints. While they aren't needed for strength, biscuits will help keep workpieces aligned when gluing up a long panel or one made up of a lot of boards.

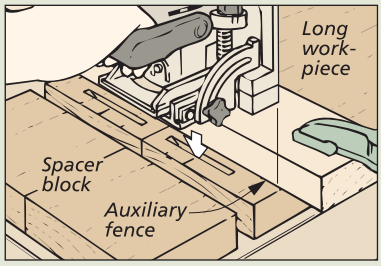

Long Corner Joints. To cut slots near the end of a long piece, the joint is treated like a T-joint, see page 3. Plus, a spacer block is used to provide extra support for the joiner.

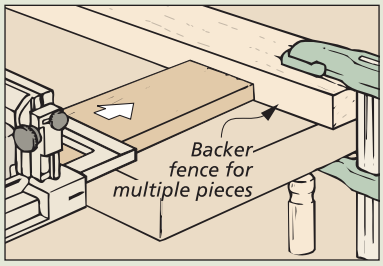

Securing Multiple Pieces. With multiple pieces, you can save time by clamping down a backer fence to push the pieces against so you don't have to clamp each one separately.

©2017 CRUZ BAY PUBLISHING, INC. ALL RIGHTS RESERVED.

routing **Large Holes**

Clean holes for the candle centerpiece could be a challenge if you don't have a set of large-diameter Forstner bits. A good option is to make a template that allows you to rout the hole with a pattern bit in a hand-held router, sizing the holes to fit the glass candleholders.

TEMPLATE. To make the template, cut a piece of hardboard the size of the base and mark the centers of the holes according to the plan. After you have the holes laid out, you can take the piece over to the drill press to cut the holes with a circle cutter.

ROUTING THE BASE. Once the holes are cut in the template, you can attach it to the base using a few pieces of carpet tape in the corners. Now you're ready to cut the holes with a router. I used a pattern bit with a short cutting length so that I could take small amounts of material with each pass around the template.

Start routing in the middle of the holes and keep making wider sweeps until you reach the edge of the template holes. Then remove the template and lower the bit about a ¼" after each pass until you've routed out all the waste material and are left with smooth holes for the candleholders and at least a ¼" of material in the bottom of the holes to support them.

If the holders are tapered, be sure to use the upper measurement for the holes.

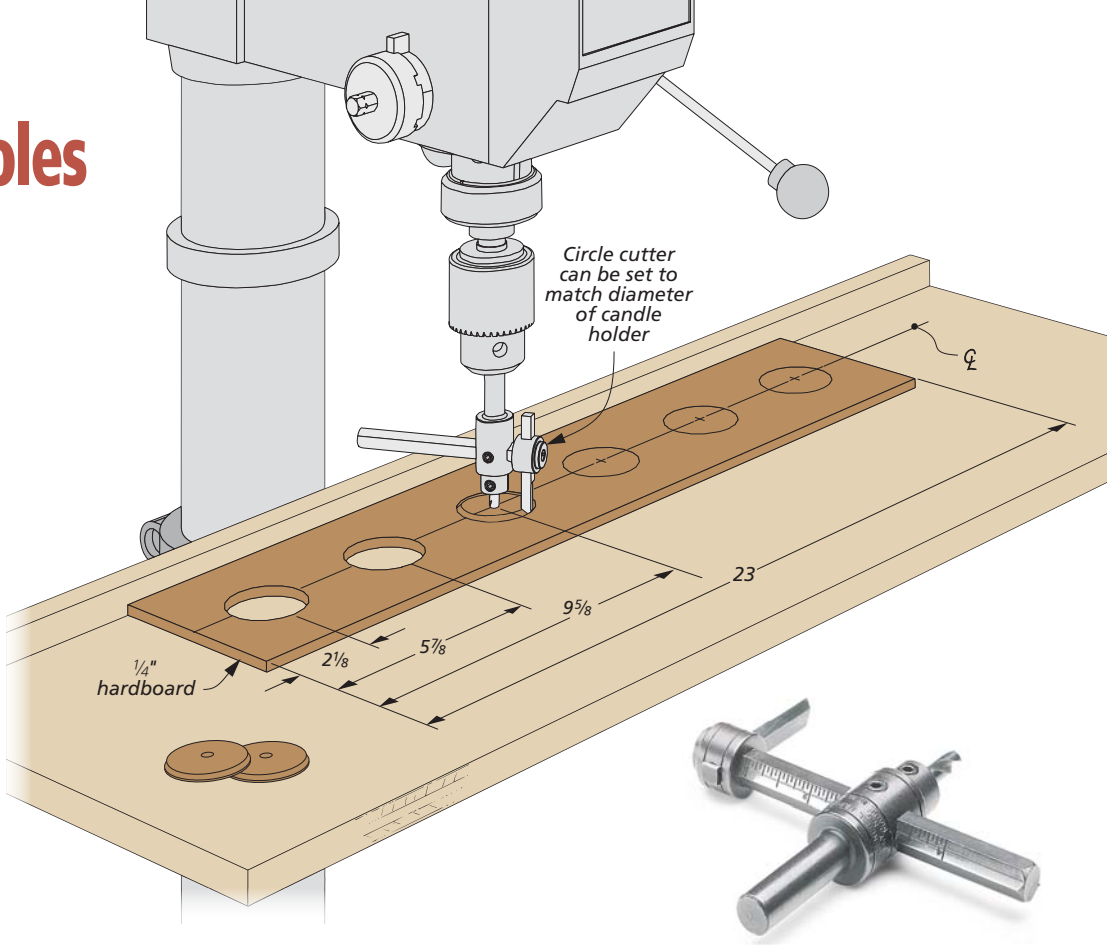

Circles. A circle cutter lets you cut any size hole.

Clean Up. A pattern bit with a ½" cutting depth will take less material with each pass of the router.

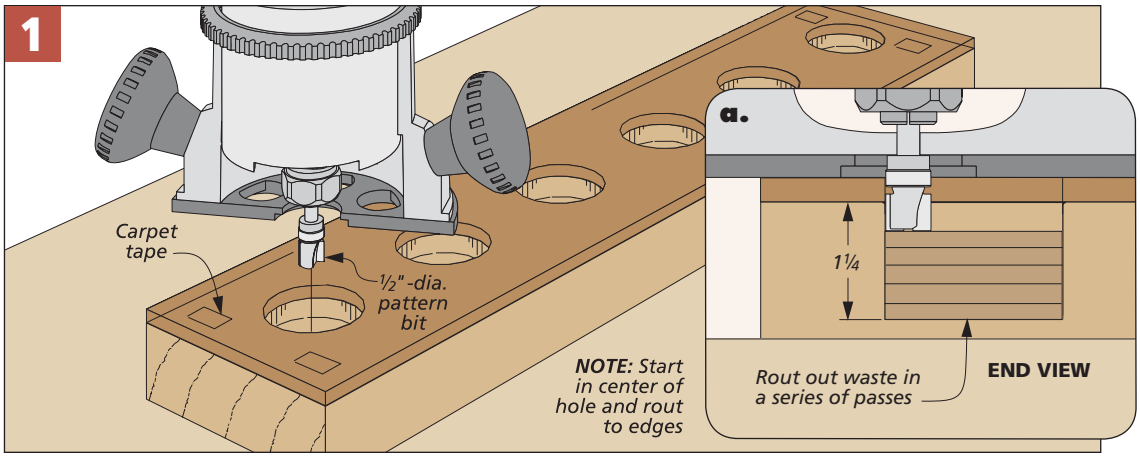

©2017 CRUZ BAY PUBLISHING, INC. ALL RIGHTS RESERVED.

routing **Spline Grooves**

Ordinarily, breadboard ends are attached to a solid-wood panel with a tongue and groove or mortise and tenon joint. But since the panel in the oak dining room table is plywood, it calls for something a little different. Here, the breadboard ends are attached to the plywood slab with ¼" hardboard splines. The splines provide additional glue area and keep the breadboard ends flush with the table top.

SLOT CUTTER. To cut the grooves for the splines, I used a slot cutter in a hand-held router, as in the photo above. But since I didn't want the spline to show on the ends, I needed to make stopped grooves in both parts.

STOP BLOCKS. To do this, I clamped a pair of stop blocks between the breadboard ends. Doing it this way has a couple of advantages. First, you can cut the grooves for both parts with one setup. Second, using both workpieces provides greater surface area for the router to ride on, as in Fig. 1a. This way it can't tip while cutting and spoil the groove.

The blocks are sized to stop the bit 2" from the ends and are longer than the diameter of the cutter. This way the bit isn't trapped by the pieces.

After setting the depth so that the groove will be ¼" below the surface, I clamped the blocks so that they "catch" the bearing on the end of the bit.

ROUT GROOVE. To rout the groove, set the router on the breadboard ends, making sure the bit isn't touching the sides and turn on the router. Slowly bring it into the workpiece until the bearing touches. Then move the router clockwise around the opening (Fig. 1).

Controlled Cuts. With the stop blocks in place and the workpieces clamped securely to the bench, move the router in a clockwise direction.

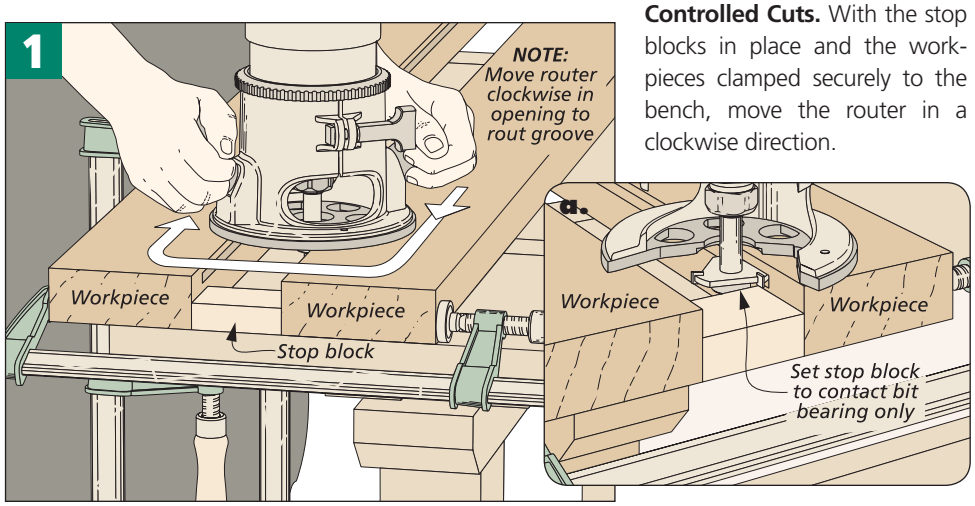

hanger bolt **Driving Options**

Hanger bolts are great for building knockdown table legs. The trick is knowing how to drive them in without damaging either sets of threads or backing out the bolt.

The simplest way is to use a pair of nuts tightened against each other, as you can see at the top in the photo at left. A socket wrench makes quick work of driving the bolt home, as in the drawing at right. Then you can remove the nuts with a pair of wrenches.

Another option is to use a commercial driver (shown in the photo at left). It has a hex head shank that you chuck into a drill. All you have to do is thread it on the bolt and drive it in. Reversing the drill removes the driver from the bolt.

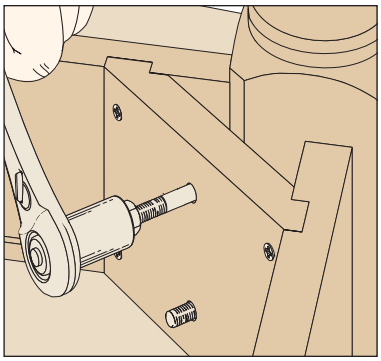

©2017 CRUZ BAY PUBLISHING, INC. ALL RIGHTS RESERVED.

trimming **Large Panels**

One of the biggest challenges of building the kitchen table is squaring up the table top. Ripping it to final width on the table saw is no problem since the sides are straight.

The problem comes in trimming the ends. It's nearly impossible to crosscut the uneven ends on the table saw. The table top is just too big for the miter gauge to hold.

To solve this problem, I turned to a technique normally used for breaking down large sheets of plywood — a circular saw and cutting guide. One of the benefits of this method is that I don't have to muscle around the panel, I can either work on the floor or benchtop.

As you know, it can be tough to get a clean cut from a circular saw. But I've found that you can eliminate a lot of the chipout if the panel is backed up. I like to use a sheet of rigid foam insulation, as shown in the photo at right. It also helps to put the good side of the panel face down.

To guide the saw, I made a simple edge guide. It directs the saw for cutting a straight line, and it makes a reference edge so you know exactly where the saw will cut.

To make an edge guide, start with an extra-wide base of ¼" hardboard, then glue and screw on a plywood fence. Finally, use the fence as a guide for the saw and trim away the waste to create the reference edge (Fig. 1).

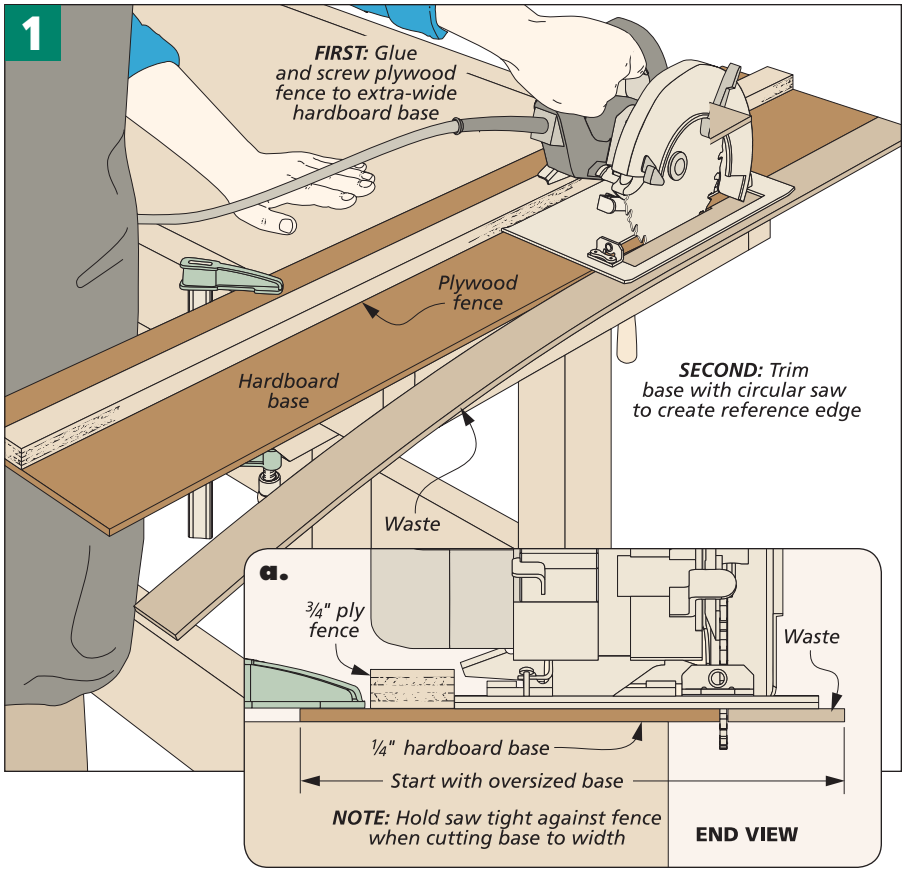

 ©2017 Cruz Bay Publishing, Inc. All Rights Reserved.

adding hinges to a Rule Joint

The door of the drop-front storage center project is hinged with a rule joint (also called a drop-leaf joint). This allows the hinges to be completely hidden inside the case and the door to rest flat without any extra support when opened.

TWO MORTISES. To make the rule joint work smoothly without binding, the special drop-leaf hinges (margin photo) have to be installed properly. As you can see in the photo above, the hinge barrel isn't centered over the joint line. It sits back from the edge of the case bottom and is mortised in along with the short hinge leaf. The long hinge leaf extends across the joint line. What this means is that you'll need to cut shallow mortises for the hinge leaves and then a deeper mortise (or pocket) for the barrel.

Hinges. The hinges used on a rule joint have a short leaf and a long leaf. This allows the hinge to bridge the joint.

CAREFUL LAYOUT. The first step is to lay out the mortises for the hinge leaves, as in Figure 1. Start by marking the side-to-side position of the hinges on the case bottom. Then measure back 3/8" from the edge and mark a line locating the center of the hinge barrel.

Next, slide the case bottom and door together with a couple of playing cards between them as spacers. Lay the hinge in position (barrel up) on the layout marks and use it to mark the outline of the mortises in the case bottom and door. Just make sure the barrel of the hinge is centered over the layout line.

THE LEAF MORTISES. With the layout complete, I got out my router and installed a straight bit. This allows you to quickly rout away the bulk of the waste from the shallow mortises. You'll get a consistent depth and a flat bottom. Finish the mortises by using a chisel to clean up around the edges (Figure 2).

THE BARREL MORTISE. Now, you need to cut a pocket for the hinge barrel (Figure 3). This won't show, so a perfect fit isn't necessary. You can get the job done quickly with a pair of chisels. Again, just make sure the pocket is positioned accurately, as shown in Figure 3a.

ASSEMBLE THE JOINT. Once the pockets are cut, you can fit the hinges into the mortises and assemble the joint. A self-centering bit makes drilling the pilot holes easy (Figure 4). Then simply install the screws.

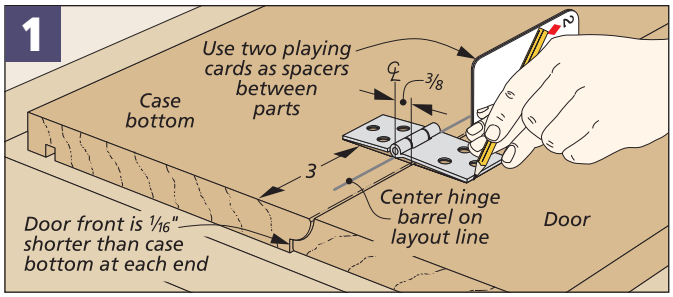

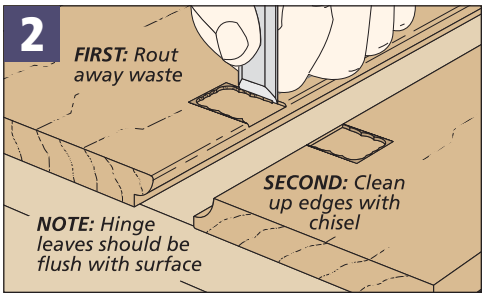

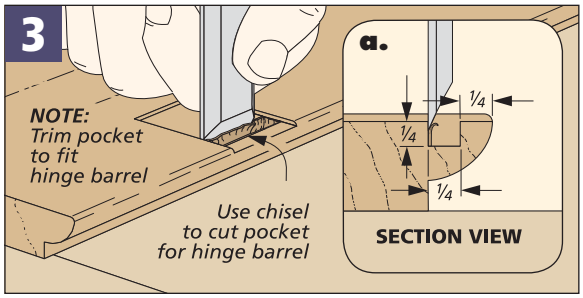

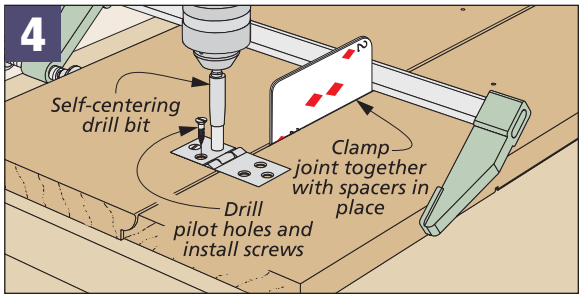

©2017 Cruz Bay Publishing, Inc. All Rights Reserved.

splined **Miters**

To strengthen the miter joints in the corners of the box, I added splines. The splines create additional gluing surface and help prevent the miter joints from opening up over time.

The hardwood splines are glued into slots cut across the miter joints. The easiest way to cut these slots is at the table saw. But the trick is to hold the box at a 45° angle while cutting the slots. To do this, I made a simple jig like the one shown at right. The jig is just a short fence with a couple of supports that cradle the box at the proper angle.

As you can see in the lower right drawing, the jig rides against the rip fence of your table saw. This way, you can use the rip fence to position the slots on the box. After you set the rip fence for the first (bottom) slot, simply rotate the box to cut identical slots on all four corners before moving on to the next (middle) slot.

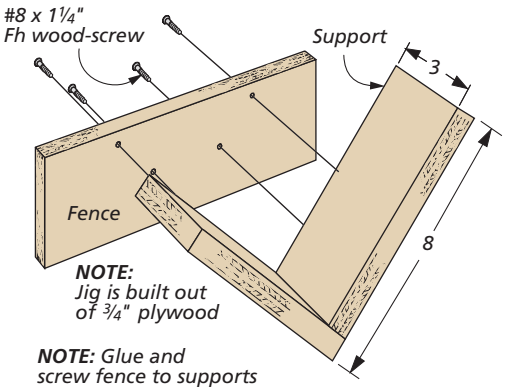

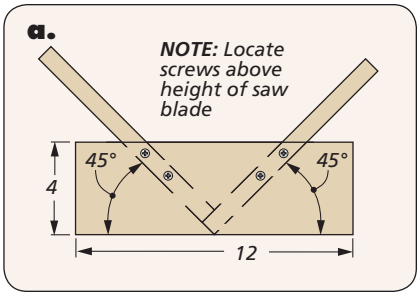

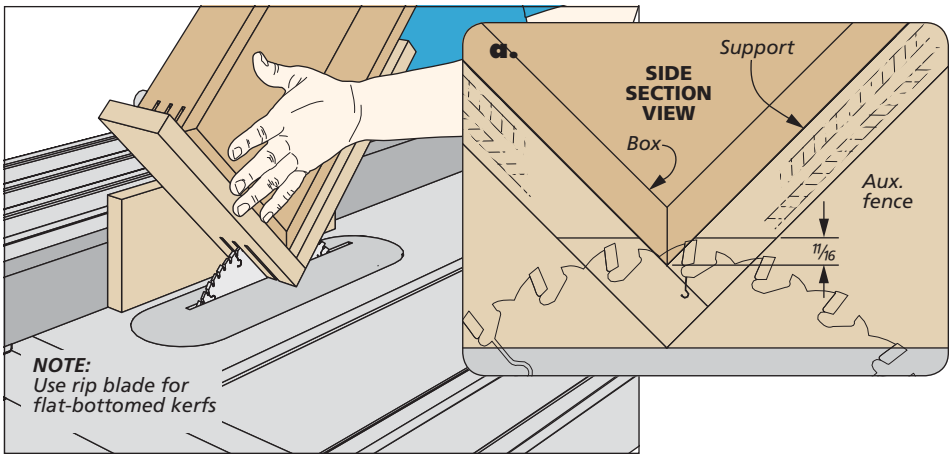

©2017 Cruz Bay Publishing, Inc. All Rights Reserved.

splined **Miters**

To strengthen the miter joints in the corners of the box, I added splines. The splines create additional gluing surface and help prevent the miter joints from opening up over time.

The hardwood splines are glued into slots cut across the miter joints. The easiest way to cut these slots is at the table saw. But the trick is to hold the box at a 45° angle while cutting the slots. To do this, I made a simple jig like the one shown at right. The jig is just a short fence with a couple of supports that cradle the box at the proper angle.

As you can see in the lower right drawing, the jig rides against the rip fence of your table saw. This way, you can use the rip fence to position the slots on the box. After you set the rip fence for the first (bottom) slot, simply rotate the box to cut identical slots on all four corners before moving on to the next (middle) slot.

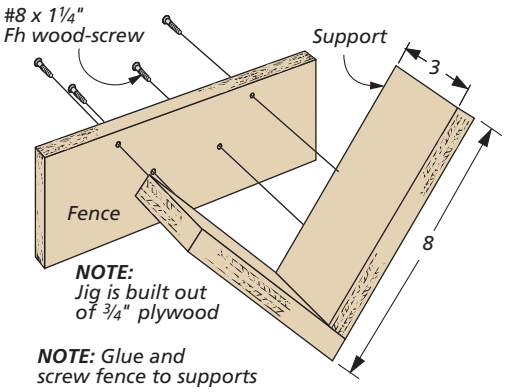

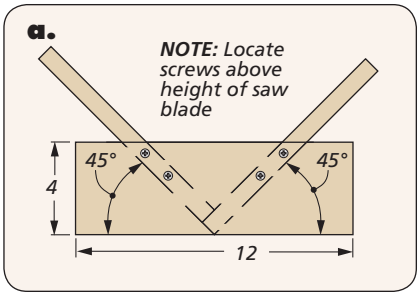

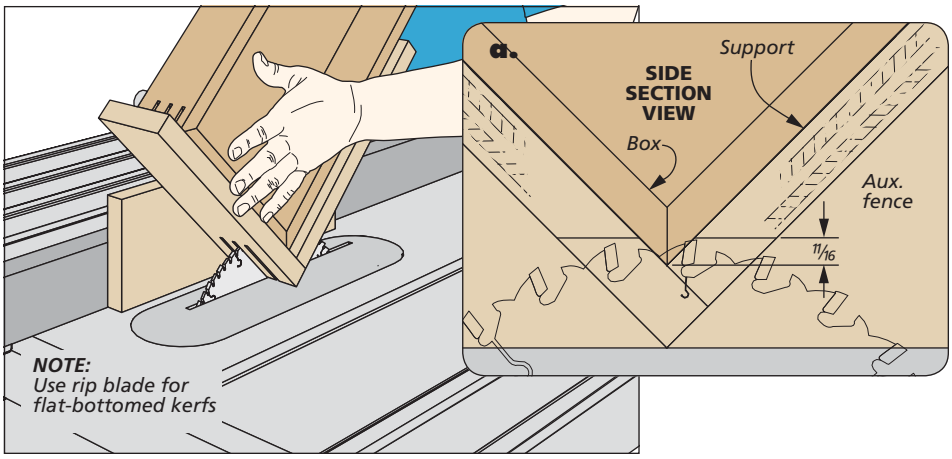

©2017 Cruz Bay Publishing, Inc. All Rights Reserved.

tip-out **Drawers**

When I built the campaign chest, I attached small blocks to the underside of the case top and the web frames to act as drawer catches. These catches do double-duty by stopping the drawer as it's pushed into the case and keeping it from accidently being pulled out of the case and spilling the contents.

This works well, but presents a small challenge. Detail 'a' at right shows how the catch stops the drawer when opened. But to remove (or insert) the drawer, the back has to clear the catch.

The main drawing shows the simple solution to the problem. All you have to do is cut a short bevel on the lower back edge of the drawer sides. This allows you to tip the drawer up and slide the drawer back beneath the catch. It's easy to do and works well.

Saw, then plane. You'll want to wait until after the drawers have been assembled to cut the bevels on the sides. This way, you can easily test fit them to the case and know for certain the bevel is right.

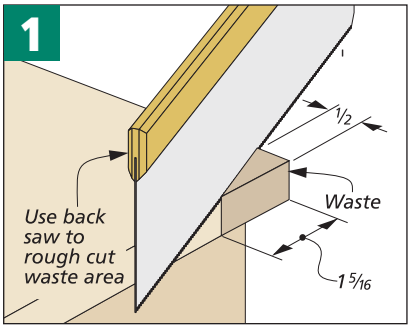

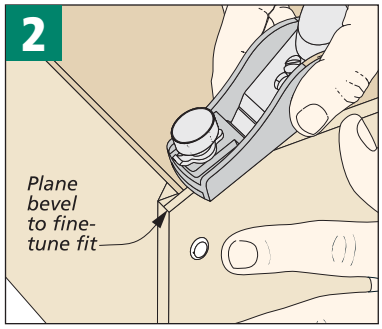

The drawings above show the simple process. First, I laid out the bevel cut on each drawer side. Then I used a back saw to cut away the waste, staying to the outside of my layout line, as shown in Figure 1. Finally, I turned the drawer "bottom up" to smooth the saw marks and fine-tune the fit with a block plane (Figure 2).

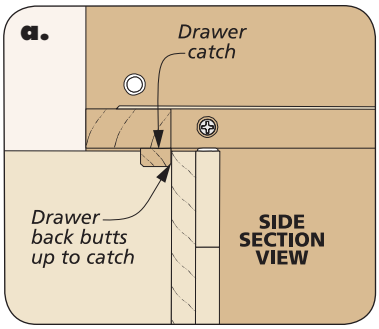

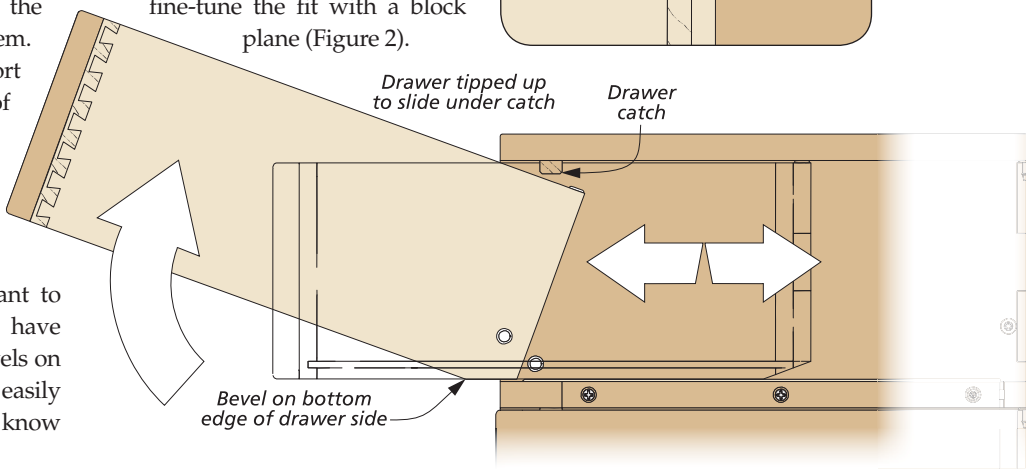

©2017 Cruz Bay Publishing, Inc. All Rights Reserved.

ONLINE EXTRAS

crisp, clean **Cutouts**

The back of the TV cabinet project needs a cluster of four cutouts to provide cable access and ventilation. The drawings at right show how you can make clean, accurate cutouts without spending too much time and effort.

LAYOUT & CORNERS. The first step is to lay out the four cutouts on the inside of the back panel, as shown in Figure 1. Next, I formed the rounded corners by using the layout to drill 1"-dia. holes with a Forstner bit (Figure 2). You'll want to back up the panel to avoid splintering when you drill the holes.

ROUGH CUT & SMOOTH. The corner holes now allow you to use a jig saw to rough cut the openings. Stay about ¼" to the inside of the layout lines (Figure 3).

Finally, to smooth the openings, I installed a pattern bit in my router. As shown in Figure 4, a straightedge attached to the panel with carpet tape allows you to rout a clean edge between the corner holes.

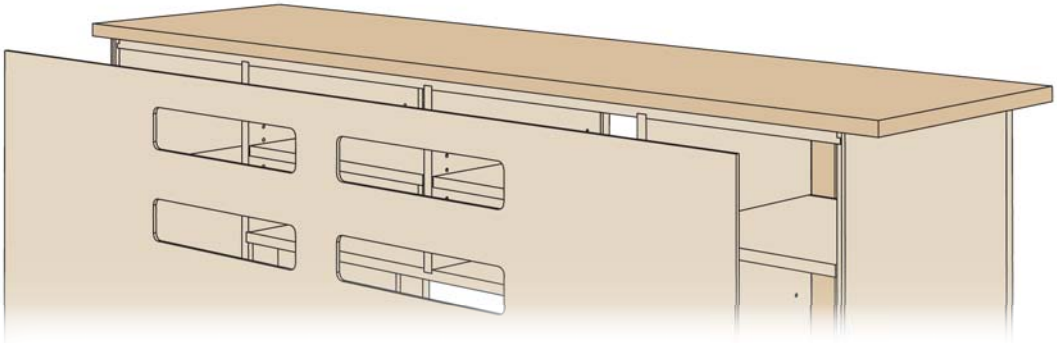

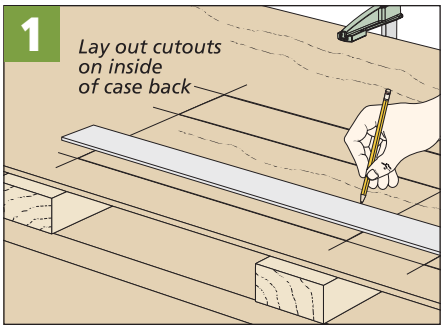

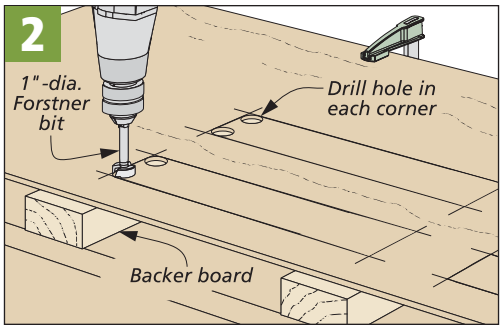

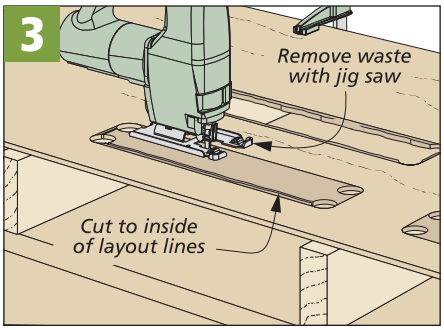

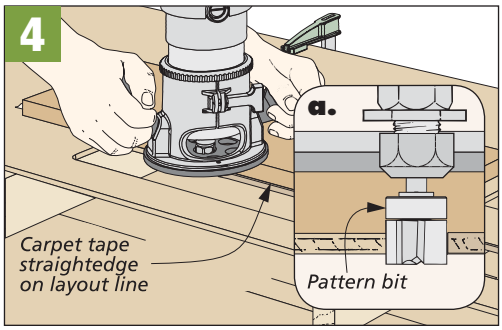

©2017 CRUZ BAY PUBLISHING, INC. ALL RIGHTS RESERVED.

Get Your Online Triple Bonus at **WoodsmithSpecials.com**

The Best of ***Woodsmith* Shop**

ONLINE TRIPLE BONUS!

1

FREE Bonus Plans

12 Bonus Project Plans & Patterns

- Shop-Built Mortise Jig
- Installing Rule Joint Hinges
- Tips for Routing Large Holes
- Full-Size Patterns & More!

2

FREE Bonus Articles

6 Free Technique Articles

- Tips on Making Half-Blind Dovetails
- One-Bit Locking Rabbets
- Pine Finishing Secrets
- Plate Joinery Tips and Tricks
- And More!

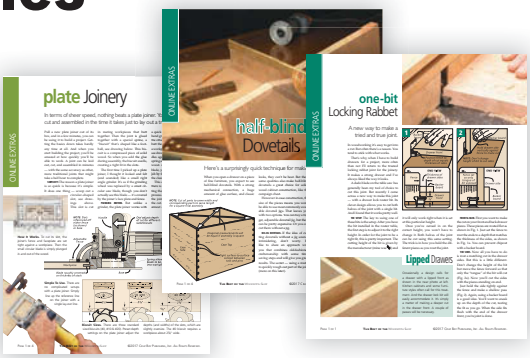

3

FREE Bonus Video Tips

Free Woodsmith Tips

- Video Tips from the Woodsmith Shop TV Show!
- Woodworking Tips to Print and Save
- Special Product Offers!

Video tips delivered FREE by email every week!

To get all your **FREE bonus materials**, go to **WoodsmithSpecials.com** and enter this access code

W1721